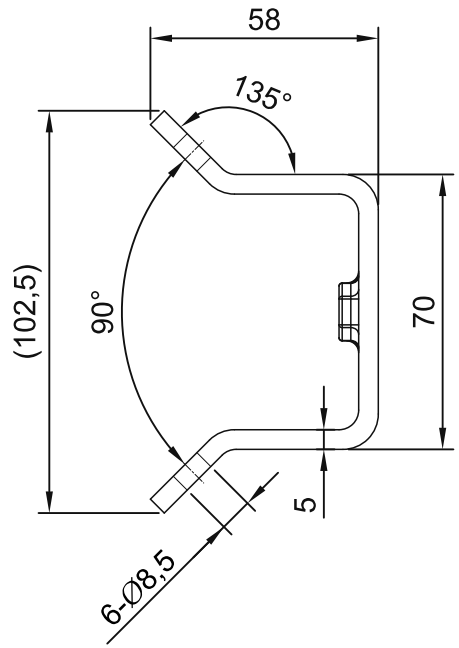

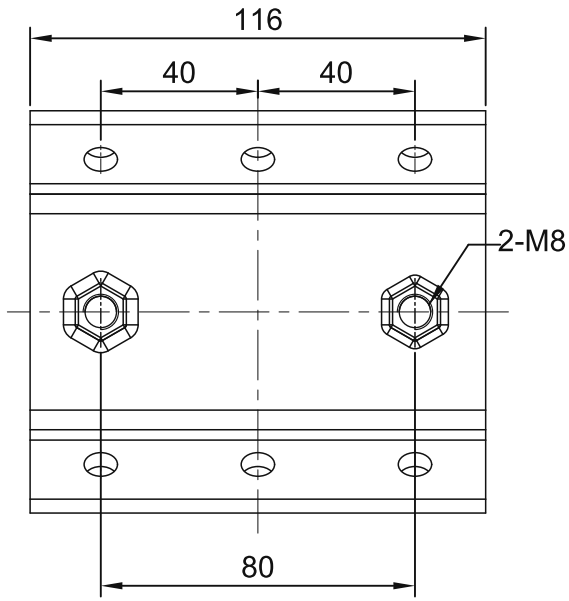

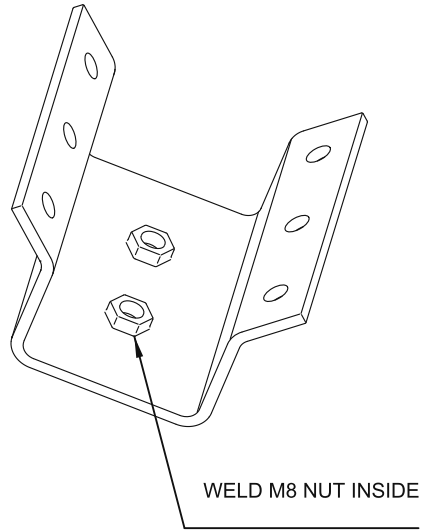

TECHNICAL NOTES:
1. Unspecified tolerances: GB/T13914-2002 ST4.
2. See 3D file for unspecified dimensions.
3. No burrs; round sharp edges R0.3.
4. Finish: matt black baked paint finish.

sinsdar

STEP CORNER ADAPTER PLATES

DRAWING / PART NUMBER
XAYG27-40120

MATERIAL: Carbon steel
UNIT: mm SCALE: see dimensions SHEET: 1 / 1