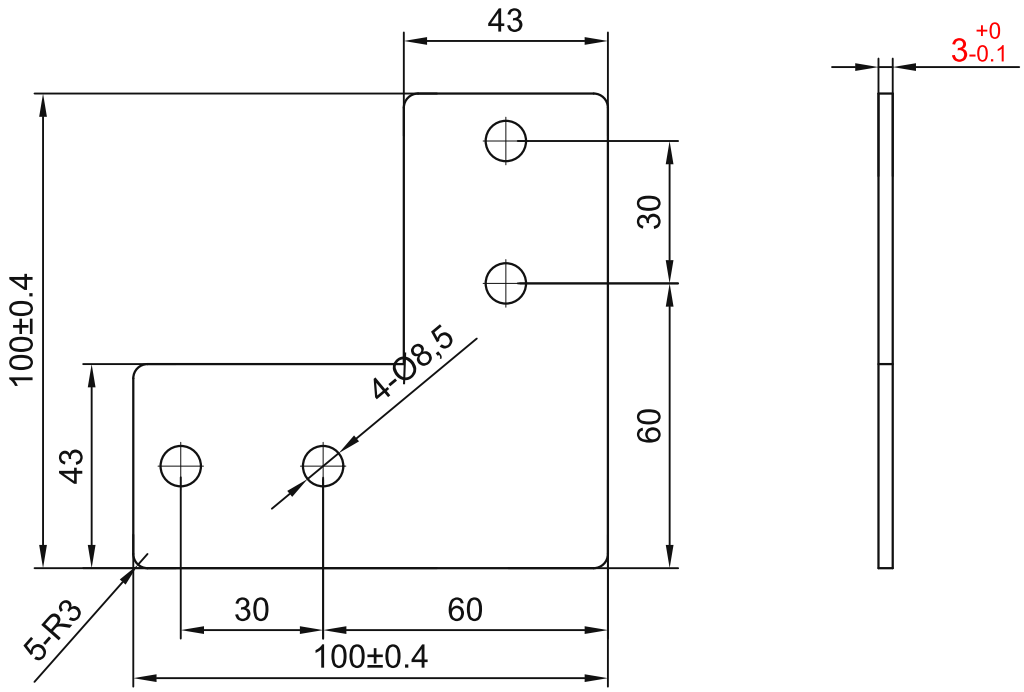

TECHNICAL NOTES:
1. Unspecified dimensional tolerances: +/-0.3.
2. Break sharp edges; no burrs.
3. No scratches or impact damage on the surface.
4. Brush the product surface.

sinsdar

JOINING PLATES

DRAWING / PART NUMBER

XACC31-4510-L-4545

MATERIAL: SUS304

UNIT: mm SCALE: see dimensions SHEET: 1 / 1