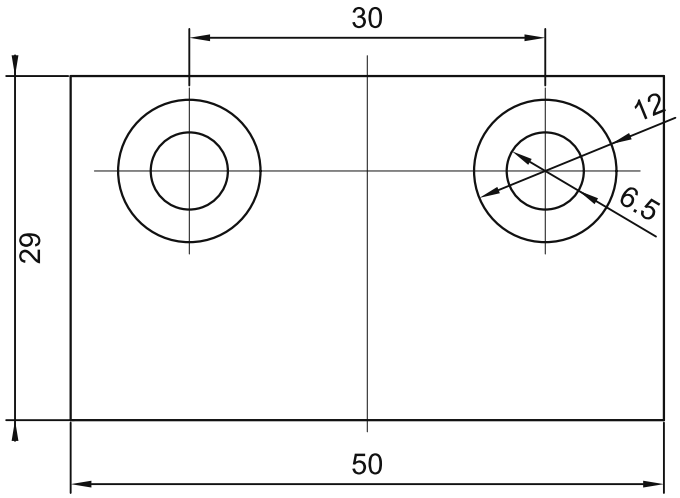

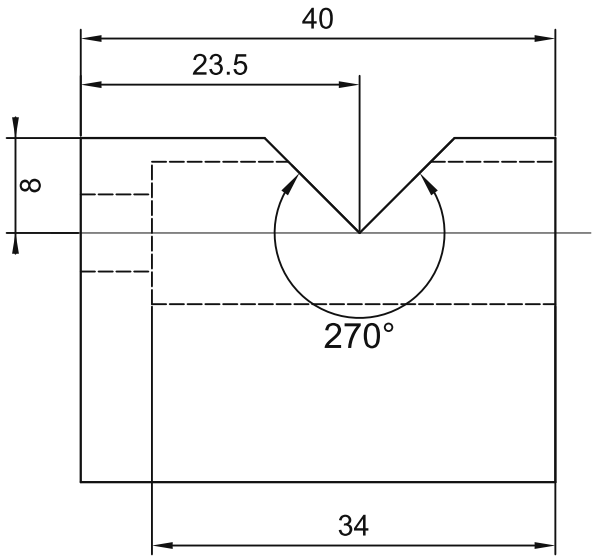

TECHNICAL NOTES:
1. Unspecified dimensional tolerances: +/-0.3 mm.
2. Break sharp edges; no burrs.
3. No scratches or impact damage on the surface.

sinsdar

SLIDING DOOR POSITIONING BLOCK - LOWER

DRAWING / PART NUMBER
XAVH51-D

MATERIAL: POM (white)

UNIT: mm SCALE: see dimensions SHEET: 1 / 1