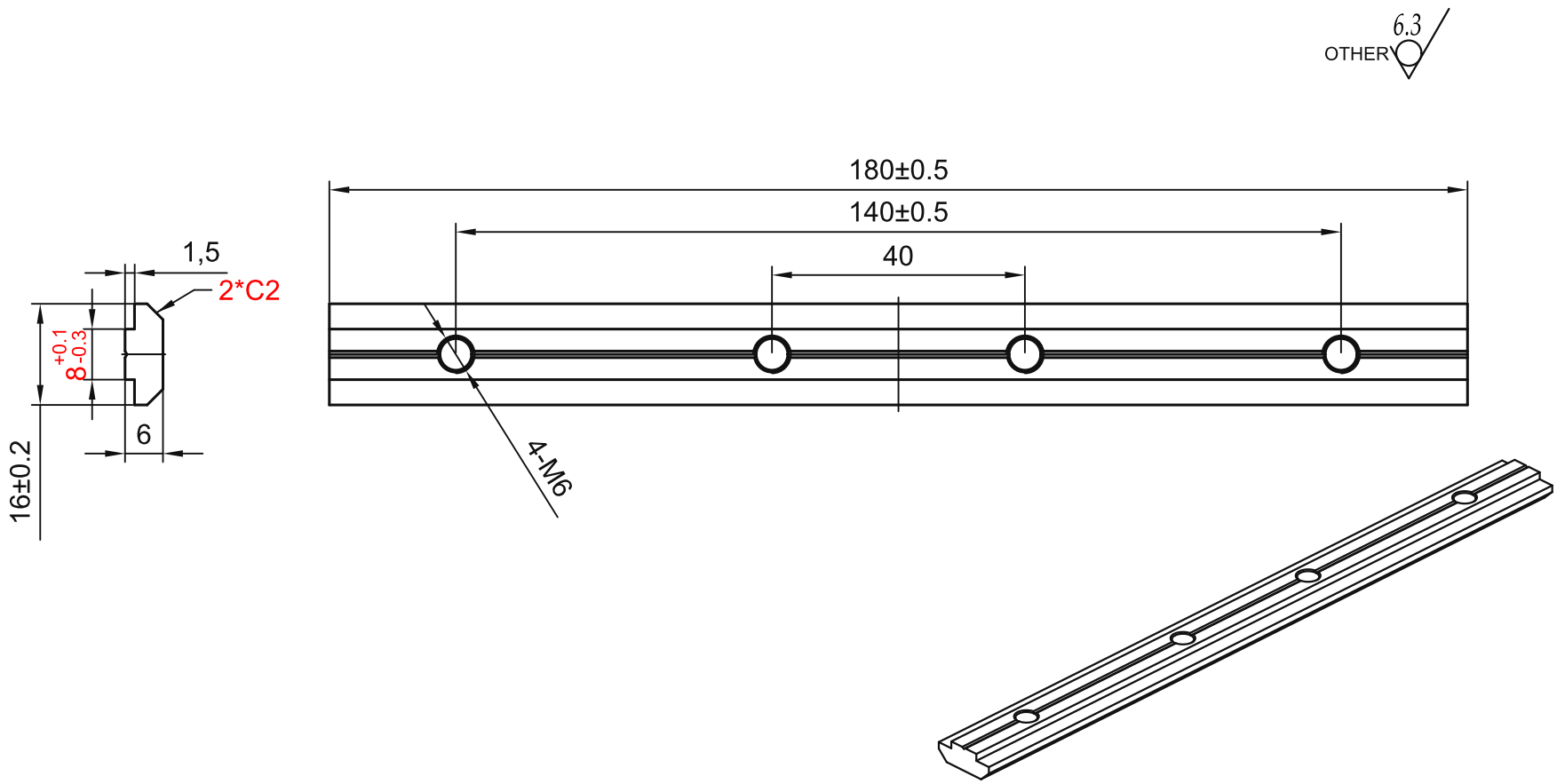

TECHNICAL NOTES:
1. Unspecified dimensional tolerances: +/-0.3.
2. Round sharp edges R0.3; no burrs. Threads must run freely.
3. Surface finish: zinc plating.

sinsdar

LINEAR EXTENSION CONNECTORS

DRAWING / PART NUMBER
XADL21-308

MATERIAL: Carbon steel
UNIT: mm SCALE: see dimensions SHEET: 1 / 1