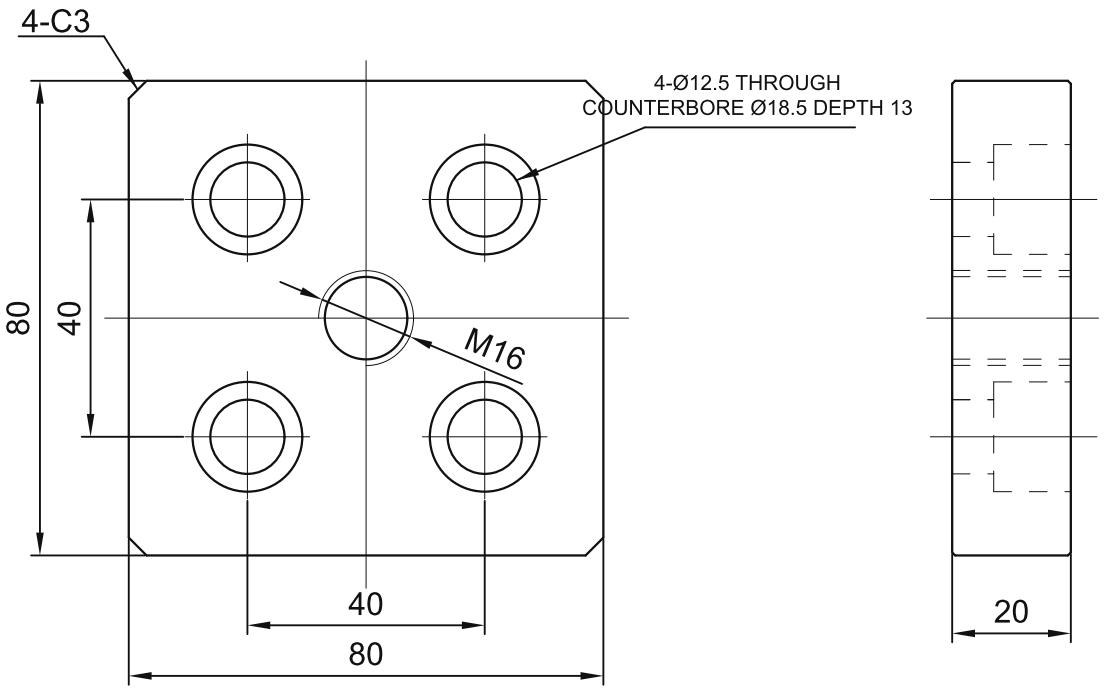

SELECTION / INSTALLATION REFERENCE
Material: A6061.
Surface treatment: Sandblasted anodized.
Not for manufacture; unspecified manufacturing tolerances are not defined.
Source auxiliary outlines retained as reference; verify actual mating interfaces.

sinsdar

BASE PLATES

DRAWING / PART NUMBER
XACF01-4010-8080-M16

MATERIAL: A6061
UNIT: mm SCALE: see dimensions SHEET: 1 / 1