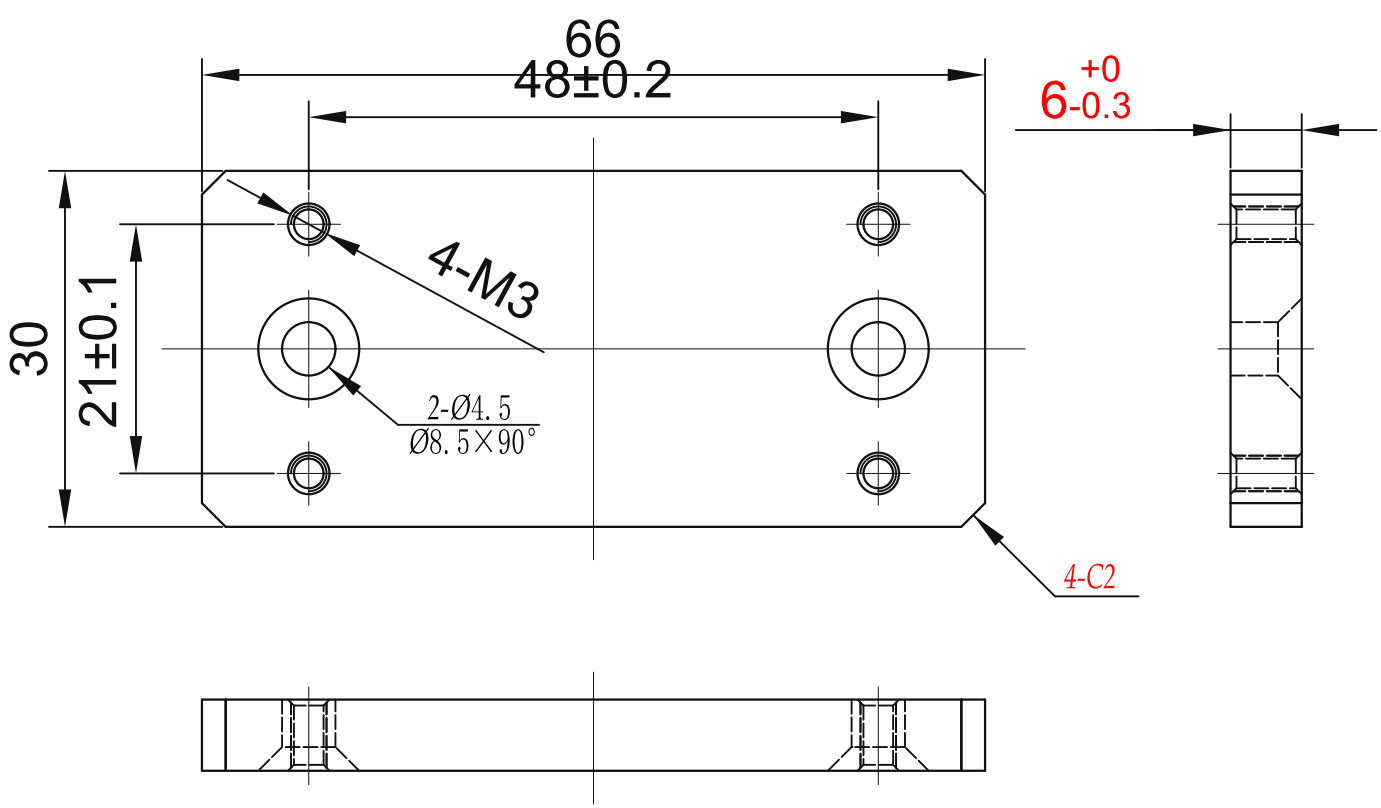

TECHNICAL NOTES:
1. Unspecified dimensional tolerances: +/-0.3.
2. Remove burrs and break sharp edges. No surface scratches, impact damage or spots.
3. Sandblast and anodize the surface.
4. Product mass: 31 g.
5. Use with AKE31-A push-button latch.

sinsdar

DOOR BOLT MOUNTING PLATES

DRAWING / PART NUMBER
XAKE01-A

MATERIAL: A6063-T5
UNIT: mm SCALE: see dimensions SHEET: 1 / 1