DIAMOND T-NUT | XAHG21-408-M5

EU series: EU 40; slot 8.2 mm
Finish: zinc plated

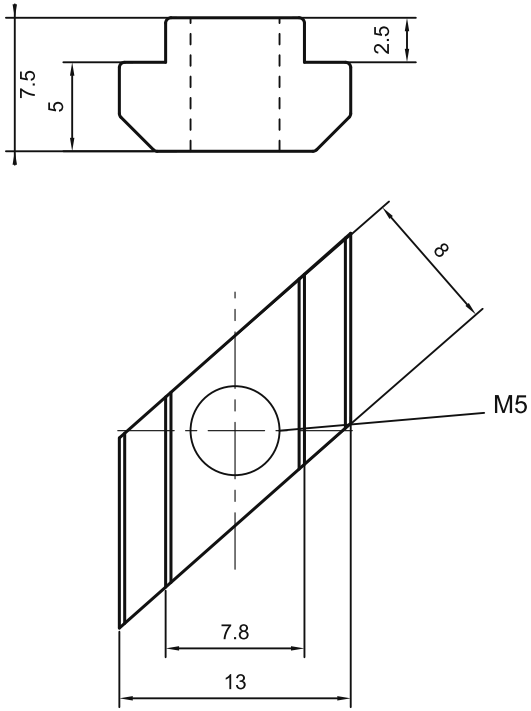

Reference: official AHG21 catalogue | dimensions in mm

SELECTION DRAWING - NOT FOR MANUFACTURE
Official published dimensions control selection.
Unspecified outlines retained from supplier reference;
not verified manufacturing geometry. Thread circle is nominal.
No unspecified tolerances, radii or surface requirements apply.

sinsdar

DIAMOND T-NUT - SELECTION

DRAWING / PART NUMBER
XAHG21-408-M5

MATERIAL: Carbon steel
UNIT: mm SCALE: see dimensions SHEET: 1 / 1