MATING PROFILE
AOB05-8080
AOB05-8080E
AOB05-8080A
AOB05-8080J

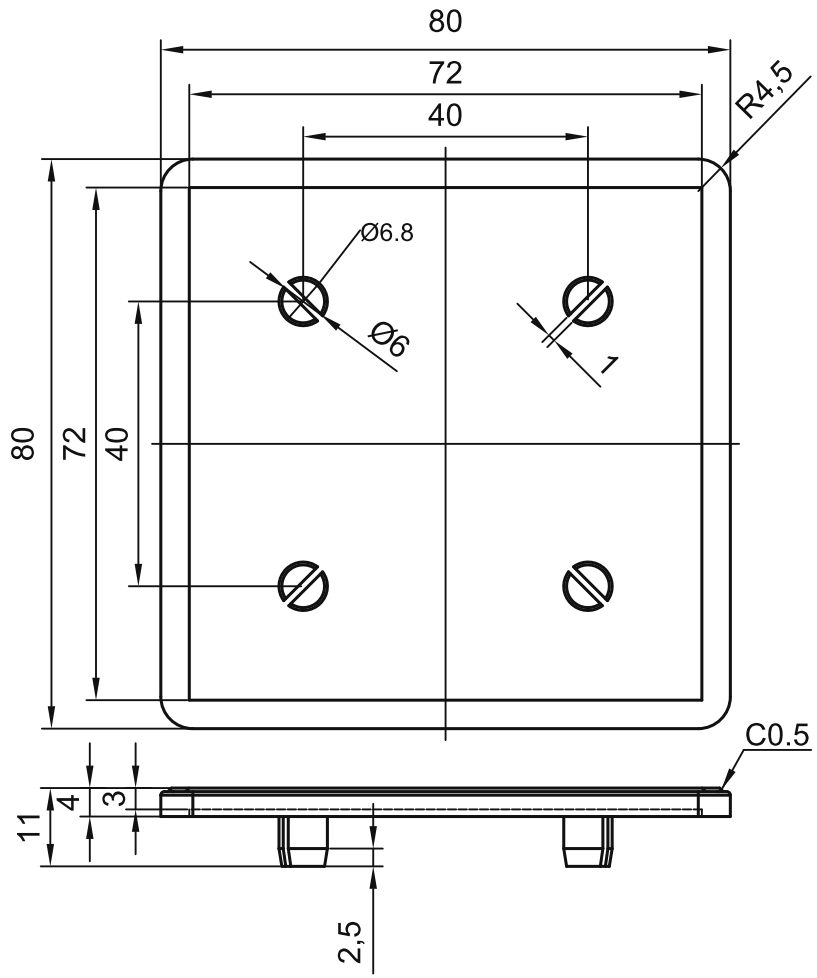

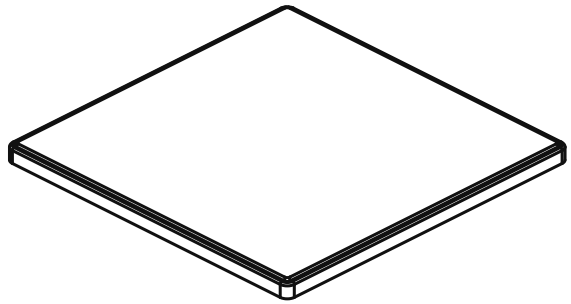

TECHNICAL NOTES:
3. Remove burrs; no shrinkage or flow marks.

Target nominal dimensions; manufacturing tolerances not specified in reviewed catalogue.

sinsdar

PLASTIC END CAPS

DRAWING / PART NUMBER
XARC51-408-8080 / XARC52-408-8080

MATERIAL: PA (51: light grey; 52: black)
UNIT: mm SCALE: see dimensions SHEET: 1 / 1