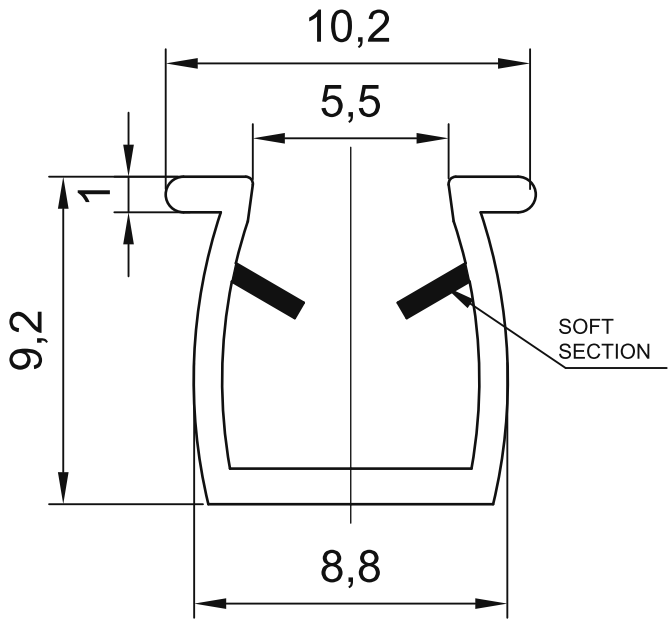

RIGID U SECTION

TECHNICAL NOTES:
1. Unspecified dimensional tolerances: +/-0.3.
2. Colour: black.
3. Smooth surface; no burrs, flash, flow marks or colour variation.
4. Length per strip: 2 m.

sinsdar

U-SHAPED COVER STRIPS

DRAWING / PART NUMBER
XAMC62-308

MATERIAL: PVC (black)
UNIT: mm SCALE: see dimensions SHEET: 1 / 1