

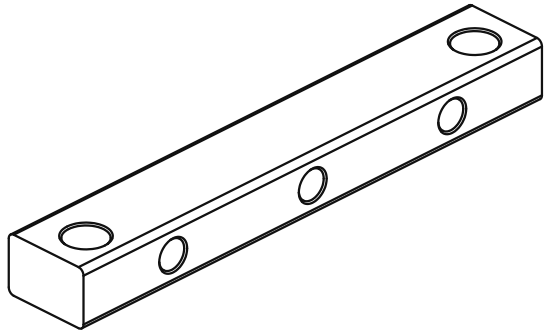

TECHNICAL NOTES:
1. Unspecified dimensional tolerances: +/-0.3 mm.
2. Deburr and break sharp edges; threads must run freely.

sinsdar

CONCEALED HINGE MOUNTING SPACERS

DRAWING / PART NUMBER
XAKB01-7879Y-A

MATERIAL: A6063-T5

UNIT: mm SCALE: see dimensions SHEET: 1 / 1