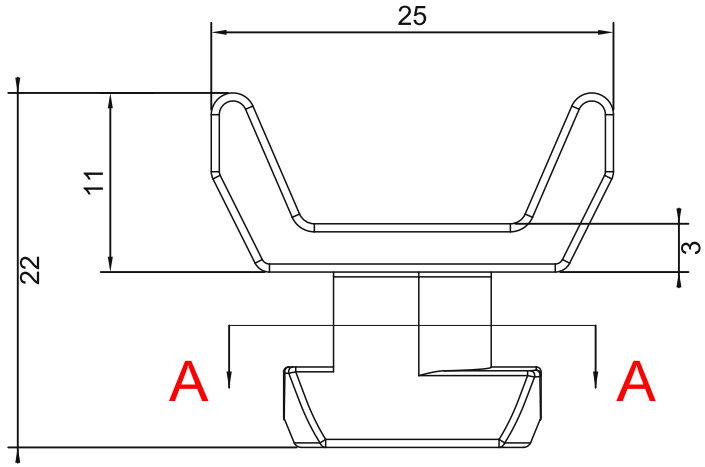

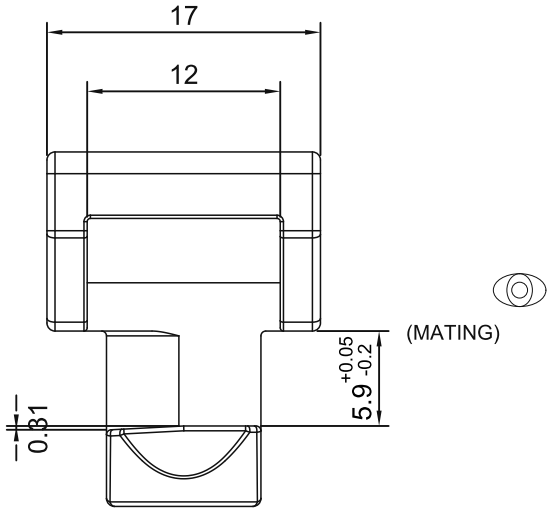

SECTION A-A

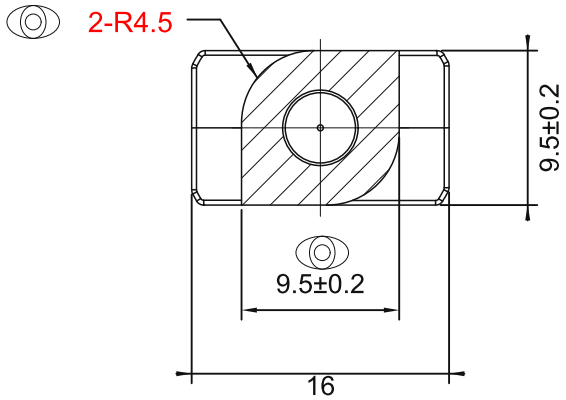

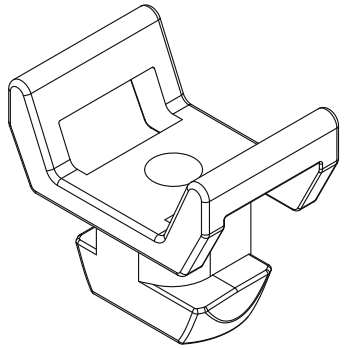

TECHNICAL NOTES:
1. Unspecified tolerances: IT10.
2. See 3D file for unspecified dimensions.
3. Unspecified edge radii: R0.2.
4. No burrs, dents, incomplete mould filling, deformation or other defects.
5. For profiles with slot opening 10 mm and wall thickness 6 mm; verify mating dimensions.
6. This symbol identifies critical dimensions.

sinsdar

CABLE TIE MOUNTS

DRAWING / PART NUMBER
XARS51-4510-H6

MATERIAL: PP

UNIT: mm SCALE: see dimensions SHEET: 1 / 1