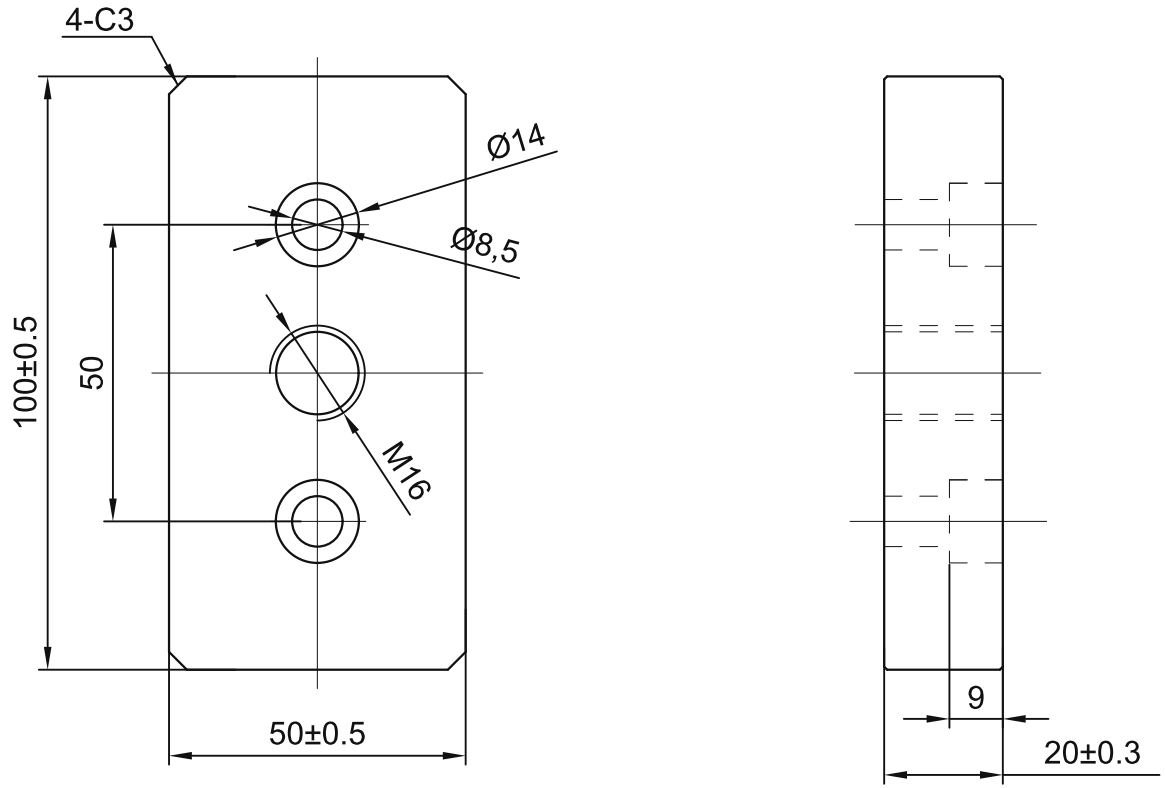

TECHNICAL NOTES:
1. Unspecified dimensional tolerances: +/-0.3.
2. Chamfer sharp edges C0.5; no burrs. Threaded-hole chamfers: C1.
3. No surface scratches or impact damage. Threads must run freely.
4. Chrome-plate the surface.

sinsdar

BASE PLATES FOR LEVELING FEET & EYE BOLTS

DRAWING / PART NUMBER

XACF23-5010-50100-M16

MATERIAL: Q235

UNIT: mm SCALE: see dimensions SHEET: 1 / 1