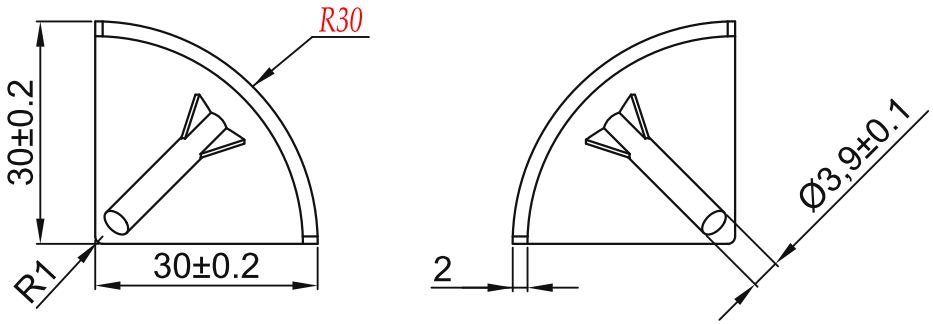

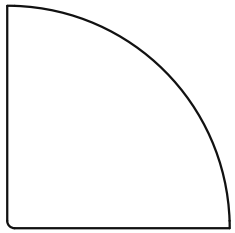

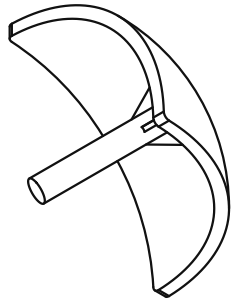

6.3
OTHER

TECHNICAL NOTES:
1. Applicable tolerance standard: GB/T1804-2000, class M.
2. See 3D file for unspecified dimensions.
3. Remove burrs; no shrinkage or flow marks.
4. For use with ADW48-G306-A three-way connectors; verify mating dimensions.

sinsdar

THREE-WAY CONNECTOR COVERS

DRAWING / PART NUMBER
XARC52-G306-A / XARC53-G306-A

MATERIAL: PA (52: black; 53: silver)
UNIT: mm SCALE: see dimensions SHEET: 1 / 1