



ACCESSORY

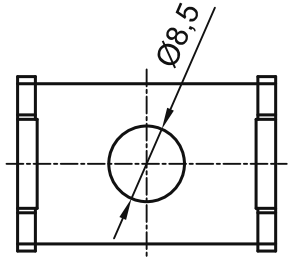

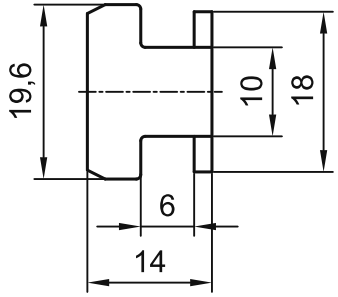

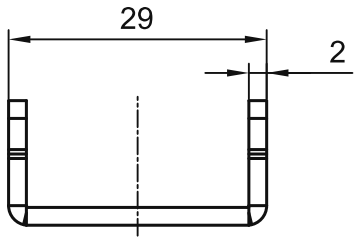

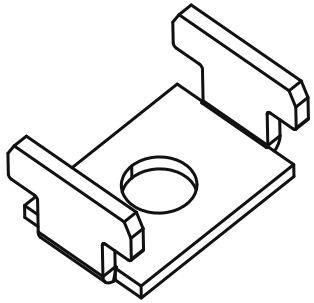

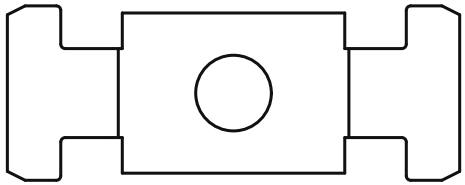

FLAT PATTERN
1:1



TECHNICAL NOTES:
1. Unspecified tolerances: IT12.
2. Remove burrs; round all sharp edges R0.3.

sinsdar

ELASTIC END CONNECTORS

DRAWING / PART NUMBER
XADB31-4010

MAIN CONNECTOR: SUS304

UNIT: mm SCALE: see dimensions SHEET: 1 / 1