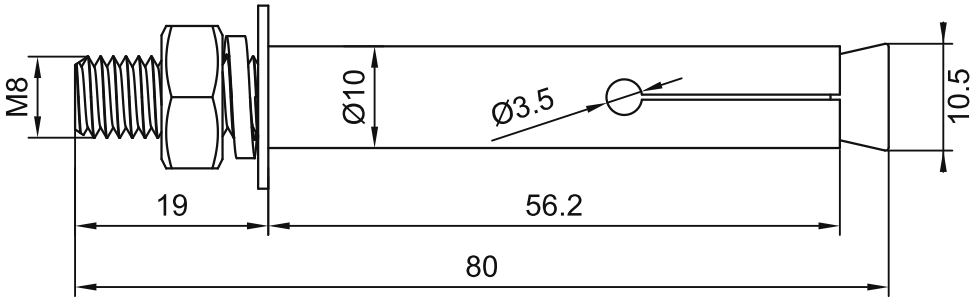

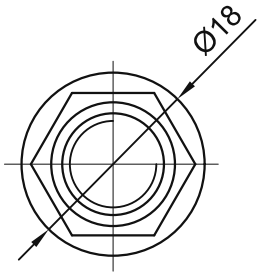

SELECTION / INSTALLATION REFERENCE
Material: Carbon steel.
Surface treatment: Zinc plated.
Not for manufacture; unspecified manufacturing tolerances are not defined.
Source auxiliary outlines retained as reference; verify actual mating interfaces.

sinsdar

EXPANSION ANCHOR SELECTION REFERENCE

DRAWING / PART NUMBER
XAVP21-N-8-80

MATERIAL: Carbon steel
UNIT: mm SCALE: see dimensions SHEET: 1 / 1