MATING PROFILE
AOB02-H4545Y
AOB02-H4545YC
AOB05-4545YC
AOB02-H4545YE
AOB05-4545YE
AOB02-H4545YA
AOB05-4545YA
AOB02-H4545YB
AOB05-4545YB
AOB05-4545
AOB05-4545C
AOB05-4545A
AOB05-4545B

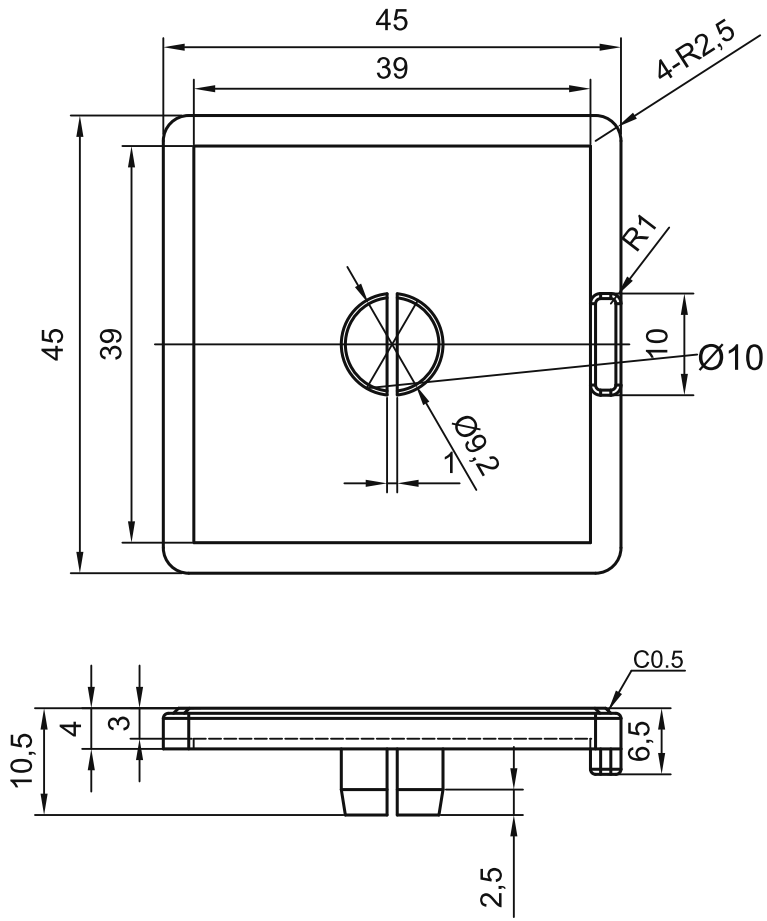

TECHNICAL NOTES:
3. Remove burrs; no shrinkage or flow marks.

Target nominal dimensions; manufacturing tolerances not specified in reviewed catalogue.

sinsdar

PLASTIC END CAPS

DRAWING / PART NUMBER
XARC51-4510-4545 / XARC52-4510-4545

MATERIAL: PA (51: light grey; 52: black)
UNIT: mm SCALE: see dimensions SHEET: 1 / 1