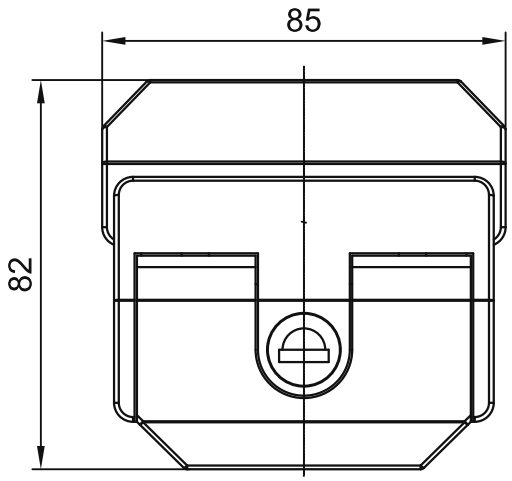

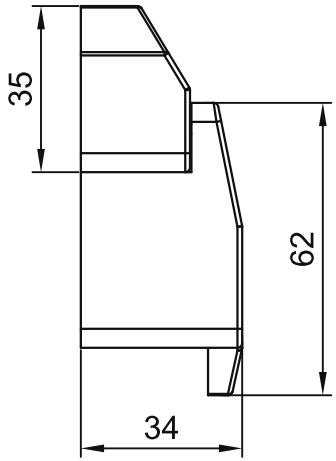

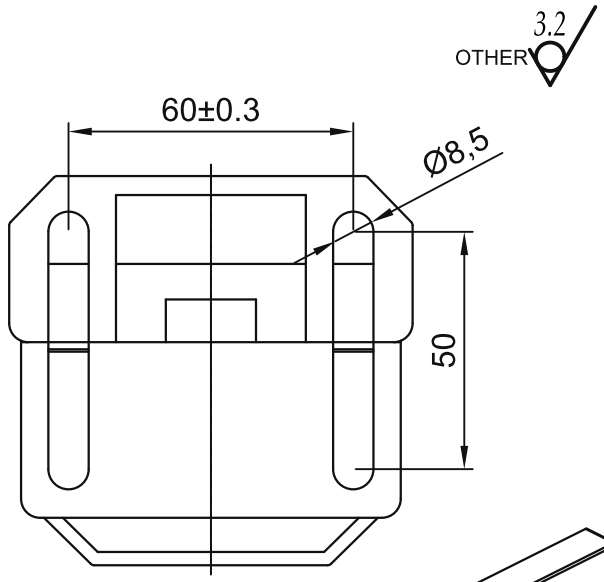

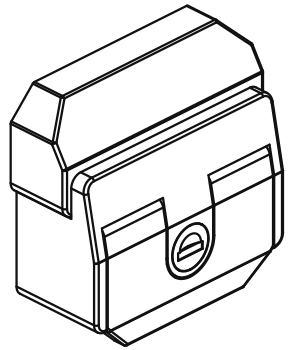

TECHNICAL NOTES:
1. Unspecified dimensional tolerances: +/-0.5.
2. Round sharp edges R0.5.
3. Finish 46: light grey spray coating; finish 47: black spray coating; no obvious scratches or burrs.
4. Use with an M8 square nut; supply two keys.

sinsdar

PROFILE DOOR LOCKS

DRAWING / PART NUMBER

XAKH46-A / XAKH47-A

MATERIAL: Zinc alloy

UNIT: mm SCALE: see dimensions SHEET: 1 / 1