PLAN: nominal interfaces

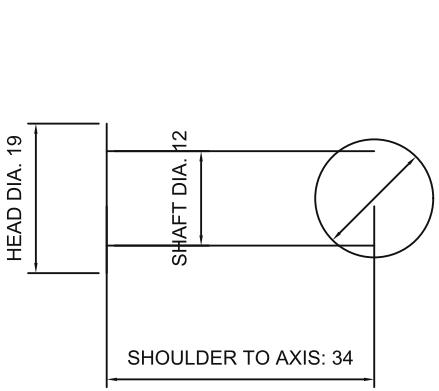

BODY ENVELOPE

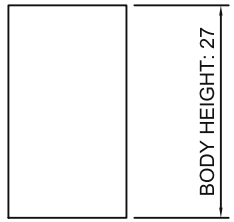

90° CONNECTION

SELECTION DRAWING - NOT FOR MANUFACTURE
Material: carbon steel. Finish: zinc plated.
Only published interface dimensions and nominal body envelope are defined.
Thread form, neck/slot contours, cap thickness and vertical shaft offset are omitted.
Manufacturing tolerances are not specified in the reviewed official catalogue.

sinsdar

CENTRAL CONNECTOR - SELECTION

DRAWING / PART NUMBER
XADF21-4510-90

MATERIAL: Carbon steel
UNIT: mm SCALE: see dimensions SHEET: 1 / 1