MATING PROFILE
AOB05-4080
AOB05-4080C
AOB05-4080J

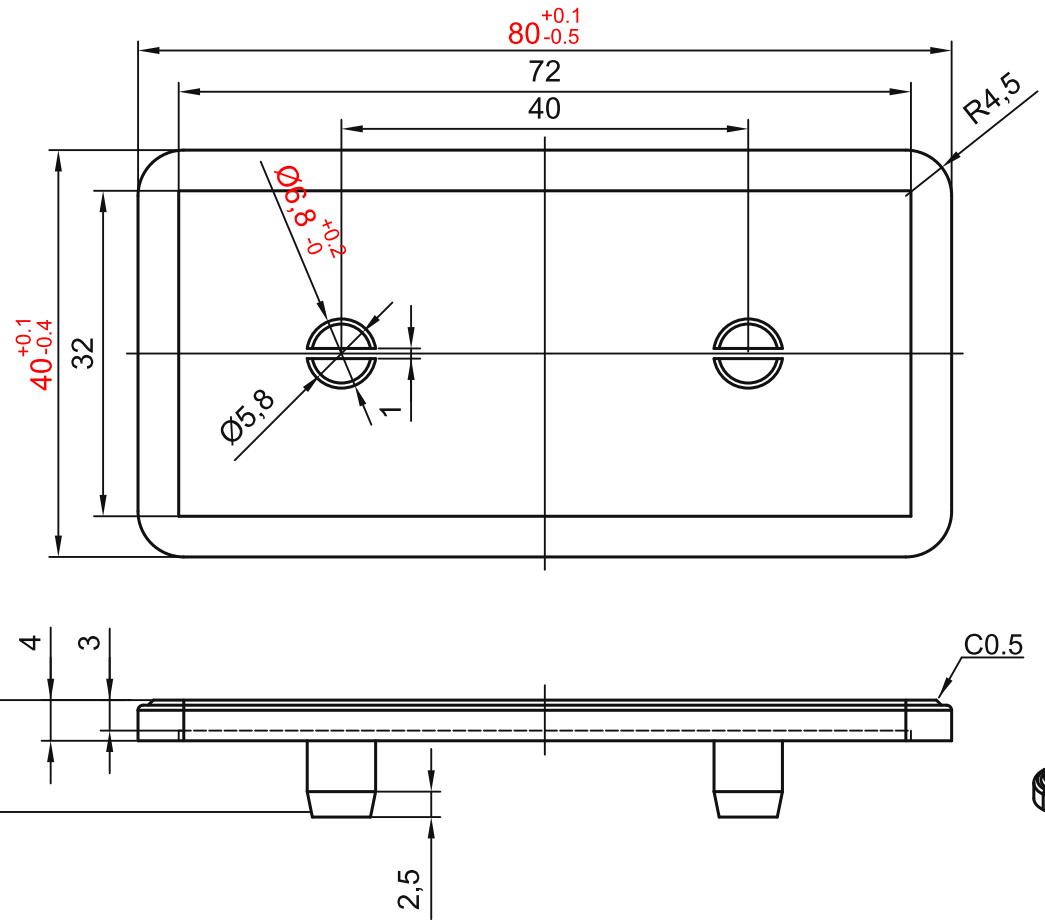

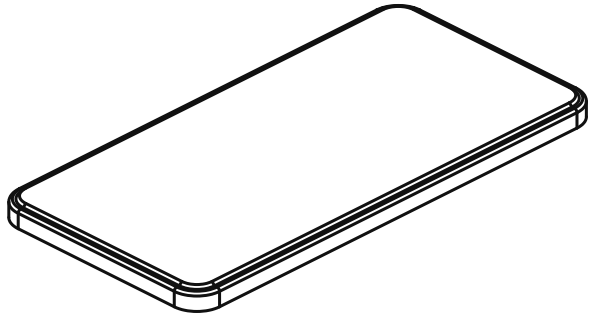

TECHNICAL NOTES:
1. Unspecified dimensional tolerances: +/-0.3 mm.
2. Unspecified fillets/chamfers: R/C0.5.
3. Remove burrs; no shrinkage or flow marks.

sinsdar

PLASTIC END CAPS

DRAWING / PART NUMBER

XARC51-408-4080 / XARC52-408-4080

MATERIAL: PA (51: light grey; 52: black)

UNIT: mm SCALE: see dimensions SHEET: 1 / 1