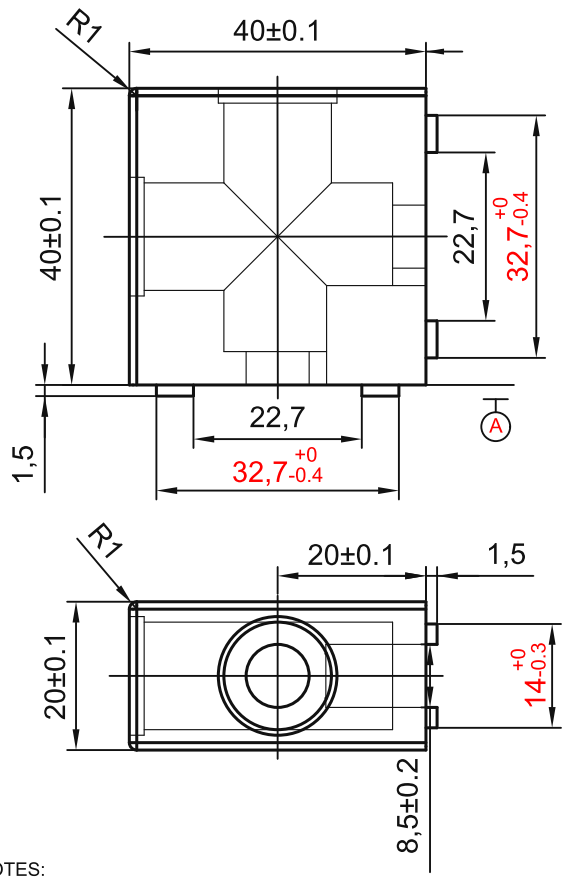

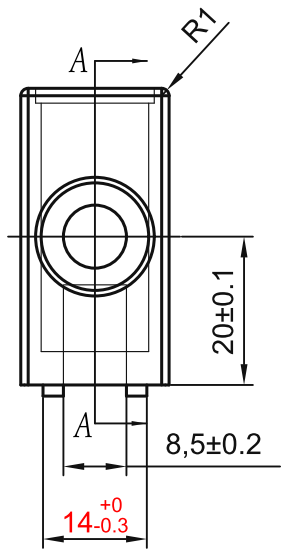

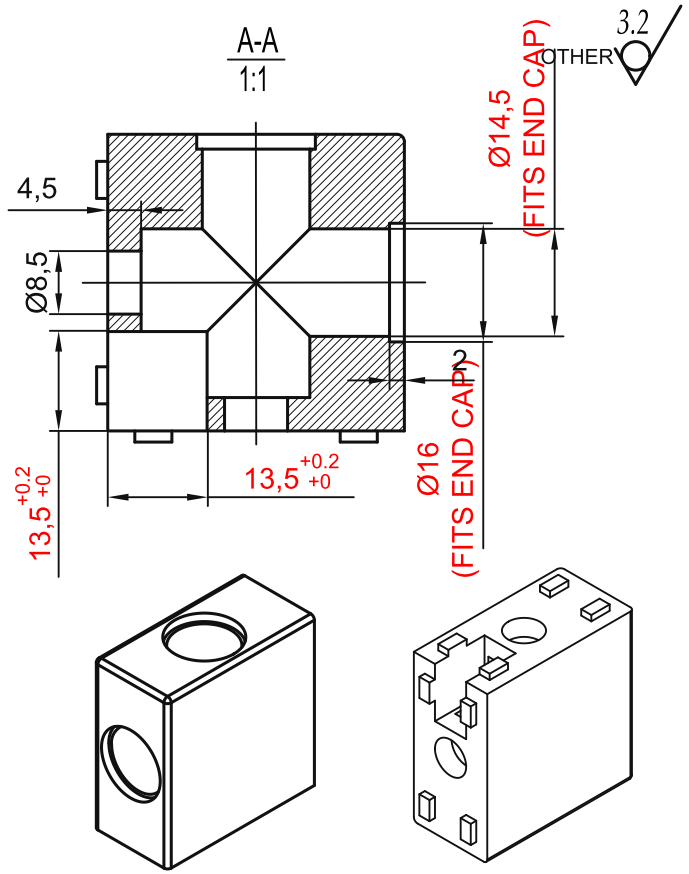

TECHNICAL NOTES:
1. Unspecified dimensional tolerances: GB/T1804-2000, class M.
2. See 3D file for unspecified dimensions.
3. Unspecified fillets: R1.
4. Spray silver paint on the surface; no obvious mould marks or burrs.
5. Threads must run freely.
6. Product mass: 55 g.

sinsdar

COMPACT PROFILE END CONNECTORS

DRAWING / PART NUMBER
XAMS12-2040

MATERIAL: ADC12

UNIT: mm SCALE: see dimensions SHEET: 1 / 1