SUPPLIER-SOURCE REFERENCE - NOT FOR MANUFACTURING
Retained source tolerances are not confirmed target manufacturing requirements.

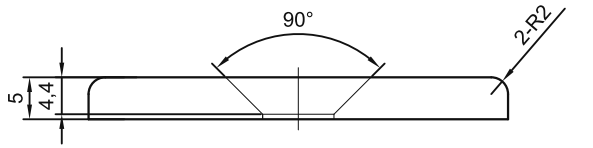

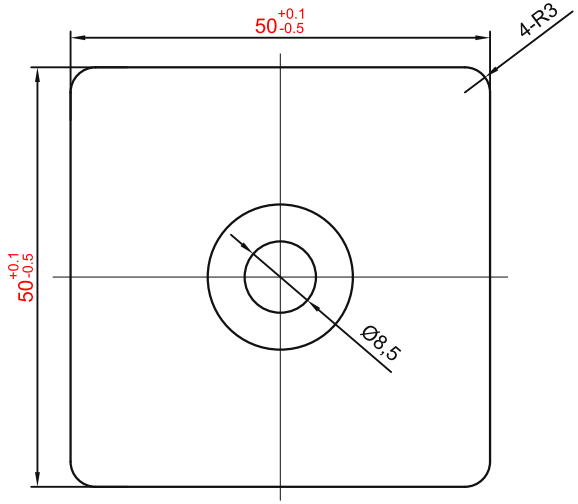

TECHNICAL NOTES:
1. Unspecified dimensional tolerances: +/-0.3.
2. Remove burrs and break sharp edges. No scratches, impact damage or spots.
3. Finish: Sandblasted anodized.

sinsdar

ALUMINUM END CAPS

DRAWING / PART NUMBER
XARC01-5010-5050

MATERIAL: A6063-T5
UNIT: mm SCALE: see dimensions SHEET: 1 / 1