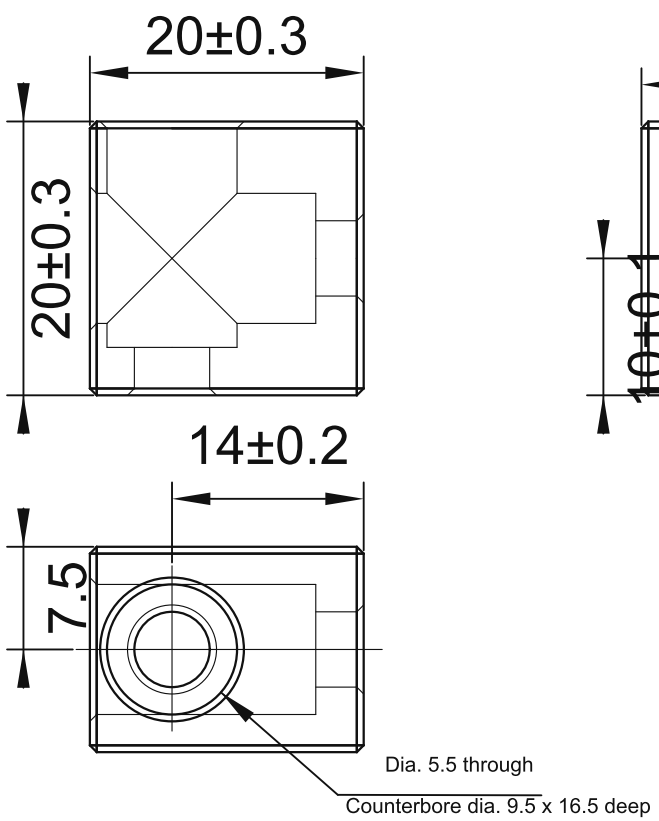

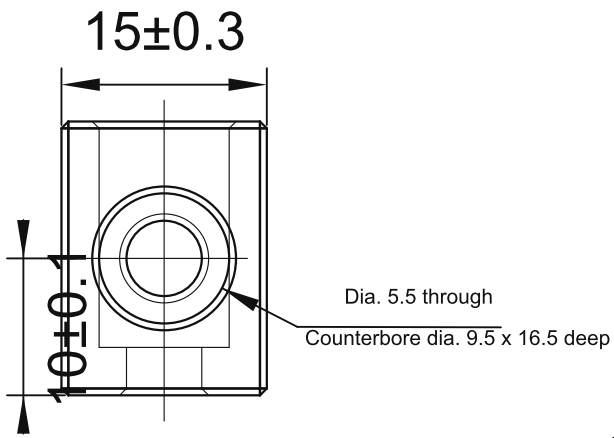

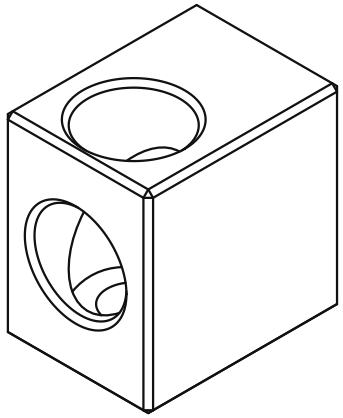

3.2
OTHER

TECHNICAL NOTES:
1. Unspecified dimensional tolerances: GB/T1804-2000, class M.
2. Unspecified chamfers: C0.5. See 3D file for unspecified dimensions.
3. Remove burrs and break sharp edges. No surface scratches, impact damage or spots.
4. Sandblast and anodize the surface.
5. Product mass: 11 g.

sinsdar

SQUARE BRACKETS

DRAWING / PART NUMBER
XADY01-206

MATERIAL: A6061
UNIT: mm SCALE: see dimensions SHEET: 1 / 1