MATING PROFILE
AOB02-H4040R

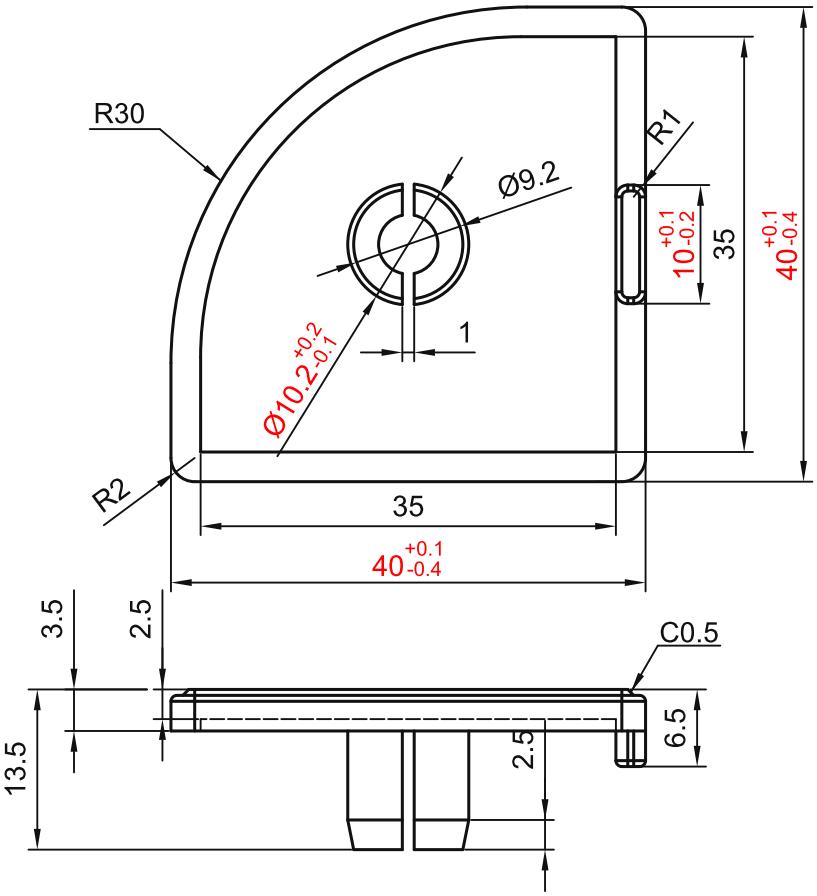



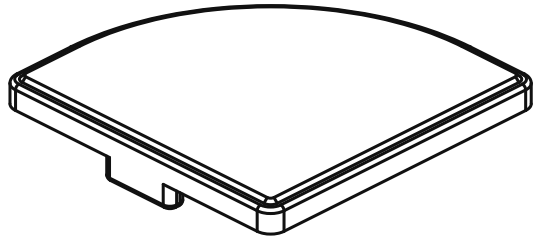

TECHNICAL NOTES:
1. Unspecified dimensional tolerances: +/-0.3 mm.
2. Unspecified fillets/chamfers: R/C0.5.
3. Remove burrs; no shrinkage or flow marks.

COLOR / VARIANT:
XARC51-4010-H4040R: Light gray (similar to RAL 7038).
XARC52-4010-H4040R: Black.

sinsdar

PLASTIC END CAPS

DRAWING / PART NUMBER
XARC51-4010-H4040R / XARC52-4010-H4040R

MATERIAL: PA

UNIT: mm SCALE: see dimensions SHEET: 1 / 1