MATING PROFILE
AOB02-H8080
AOB02-H8080C

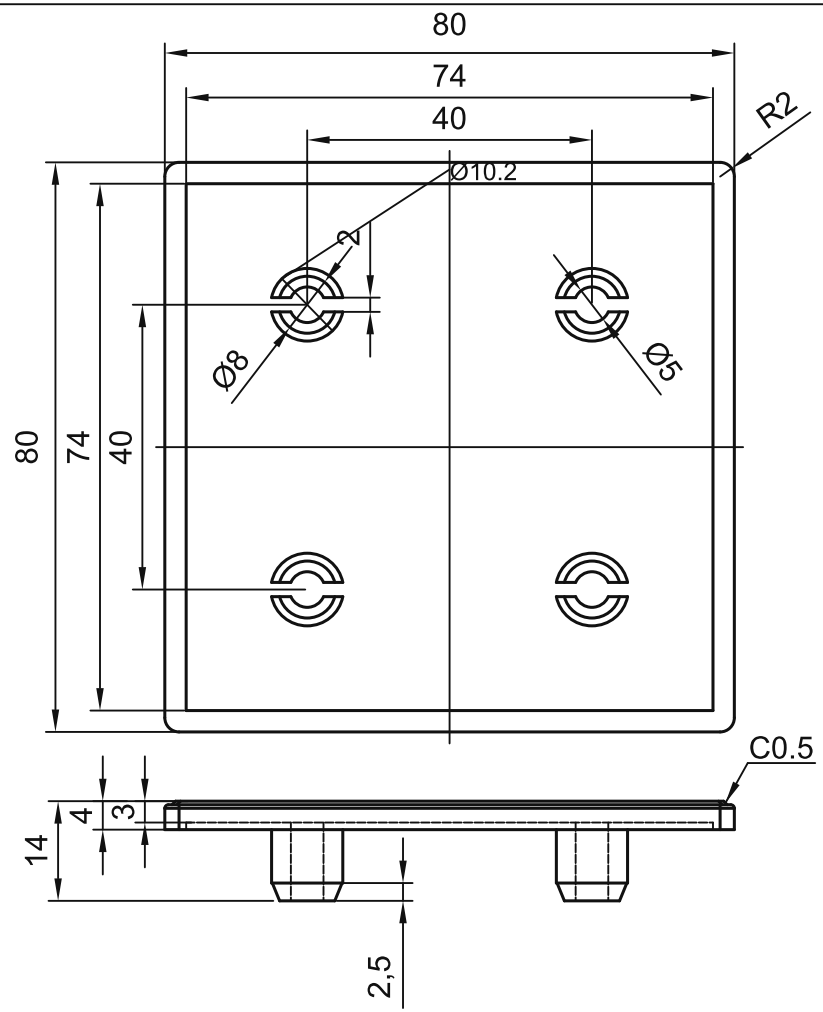

TECHNICAL NOTES:
3. Remove burrs; no shrinkage or flow marks.

Target nominal dimensions; manufacturing tolerances not specified in reviewed catalogue.

sinsdar

PLASTIC END CAPS

DRAWING / PART NUMBER

XARC51-4010-H8080 / XARC52-4010-H8080

MATERIAL: PA (51: light grey; 52: black)

UNIT: mm SCALE: see dimensions SHEET: 1 / 1