6.3
OTHER

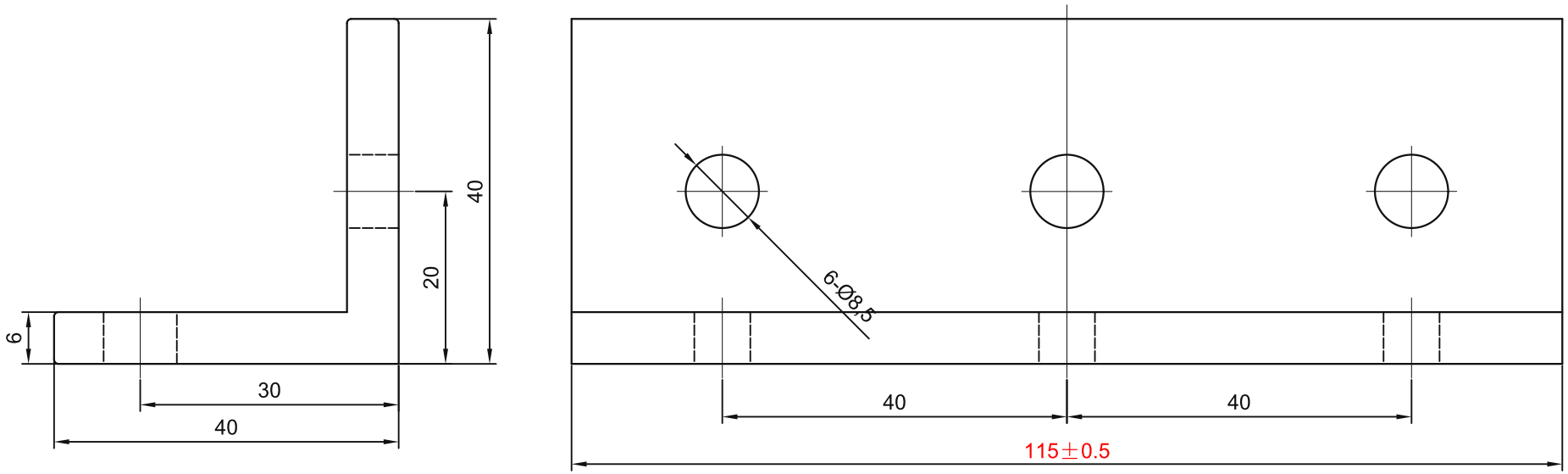

TECHNICAL NOTES:
1. Unspecified dimensional tolerances: +/-0.3.
2. Remove burrs and break sharp edges. No surface scratches, impact damage or spots.
3. Finish: 02 sandblast + anodize (cut faces and holes not anodized); 03 black anodizing.
4. Product mass: 133 g.

sinsdar

EXTRUDED CORNER BRACKETS

DRAWING / PART NUMBER
XABC02-4010-40-115 / XABC03-4010-40-115

MATERIAL: A6063-T5
UNIT: mm SCALE: see dimensions SHEET: 1 / 1