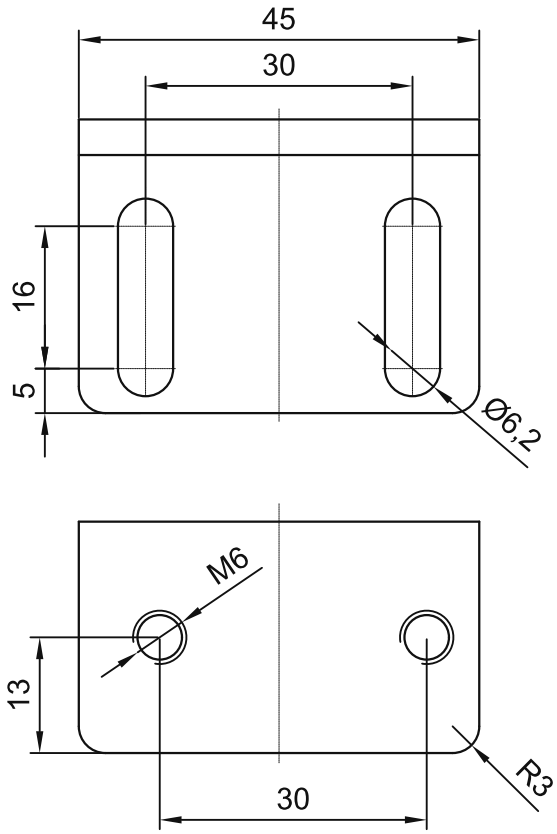

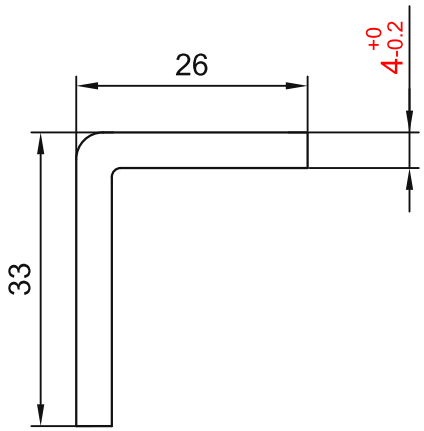



TECHNICAL NOTES:
1. Unspecified dimensional tolerances: +/-0.3 mm.
2. Break sharp edges; no burrs. Threads must run freely.
3. No scratches or impact damage on the surface.
4. Brush one product face.
5. For AKB52-2840 door catches; verify mating dimensions.

sinsdar

PROFILE DOOR CATCHES

DRAWING / PART NUMBER
XAKB23-2840-A

MATERIAL: SUS304

UNIT: mm SCALE: see dimensions SHEET: 1 / 1