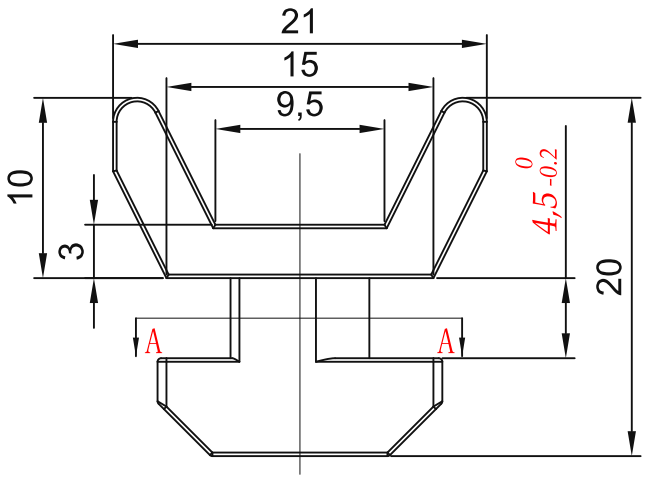

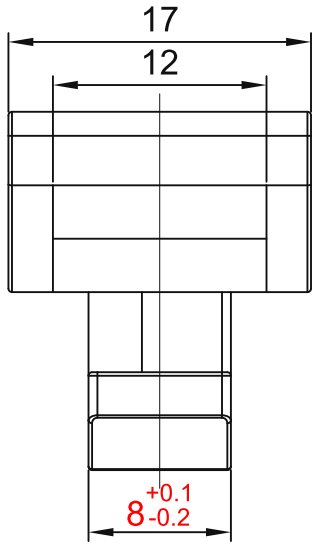

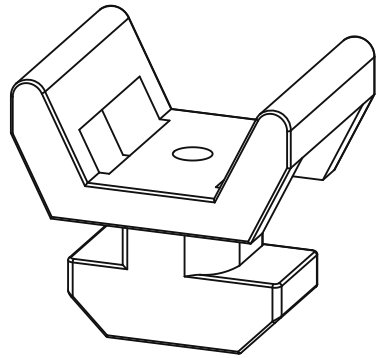

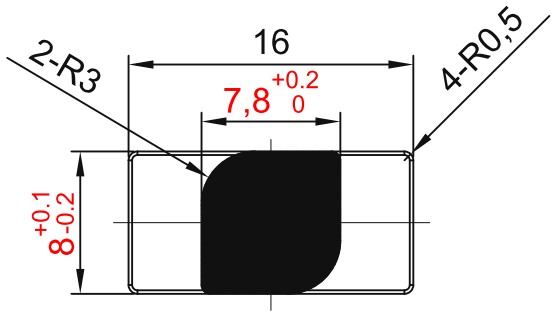

SECTION
A-A

TECHNICAL NOTES:
1. Unspecified dimensional tolerances: +/-0.2 mm.
2. Unspecified fillets: R0.2.
3. No surface drag marks, sink marks, incomplete mould filling, deformation or other defects.

sinsdar

CABLE TIE MOUNTS

DRAWING / PART NUMBER
XARS51-408

MATERIAL: PP (white)

UNIT: mm SCALE: see dimensions SHEET: 1 / 1