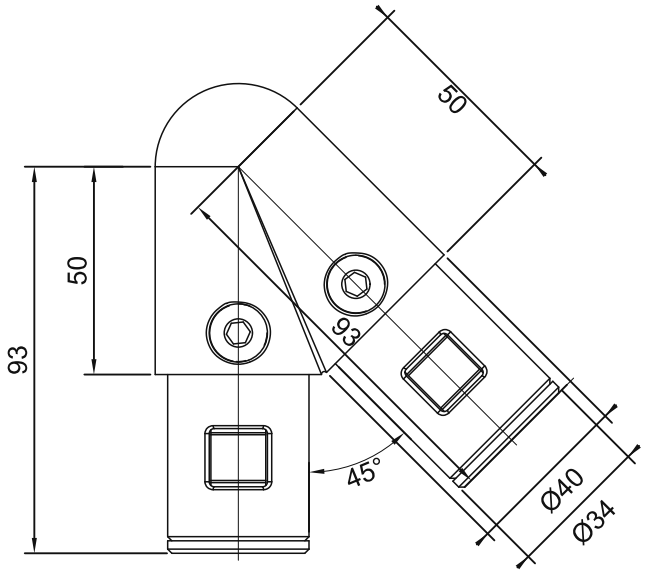

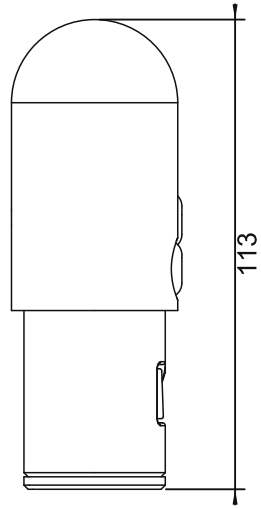

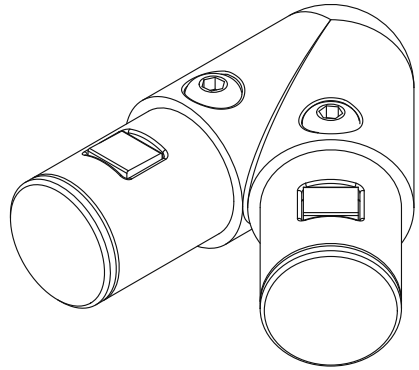

TECHNICAL NOTES:
1. Finish: surface finishing.
3. No burrs, sharp edges, scratches, dirt or spots.
4. Consistent product colour required.
5. Smooth connection to round tube required; verify mating dimensions.
Target nominal dimensions; manufacturing tolerances not specified in reviewed catalogue.

sinsdar

ROUND TUBE JOINTS

DRAWING / PART NUMBER
XAYF11-D40-V

MATERIAL: ADC12

UNIT: mm SCALE: see dimensions SHEET: 1 / 1