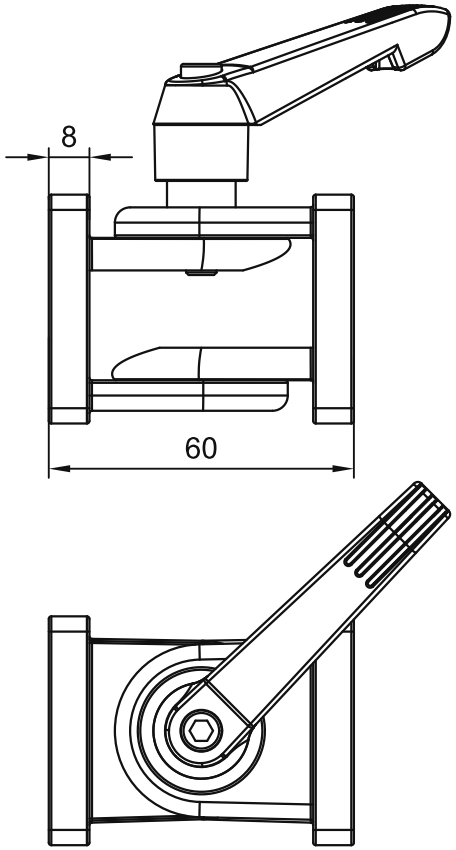


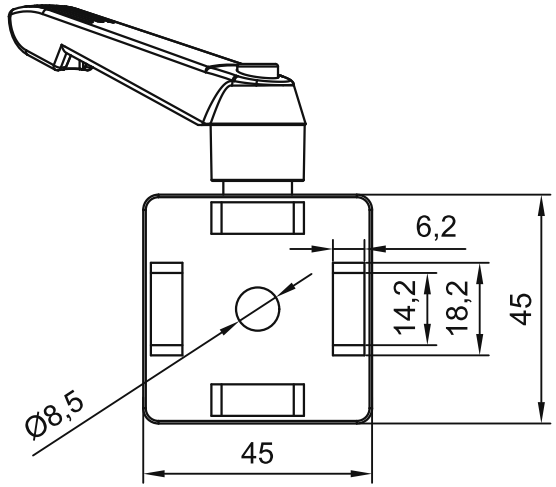


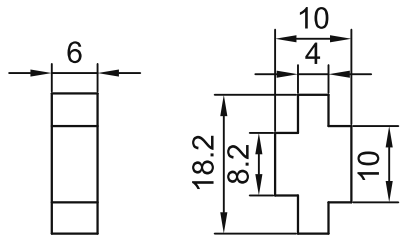


ACCESSORY
SCALE 1.5:1

TECHNICAL NOTES:
1. Unspecified dimensional tolerances: +/-0.3 mm.
2. Unspecified fillets/chamfers: R/C0.5; threaded-hole chamfers: C0.5.
3. Spray-paint the zinc-alloy surface; no obvious mould marks or burrs.

5. Includes 4 accessory pieces.

sinsdar

PIVOT JOINTS

DRAWING / PART NUMBER
XADU48-4510-S

MATERIAL: Zinc alloy
UNIT: mm SCALE: see dimensions SHEET: 1 / 1