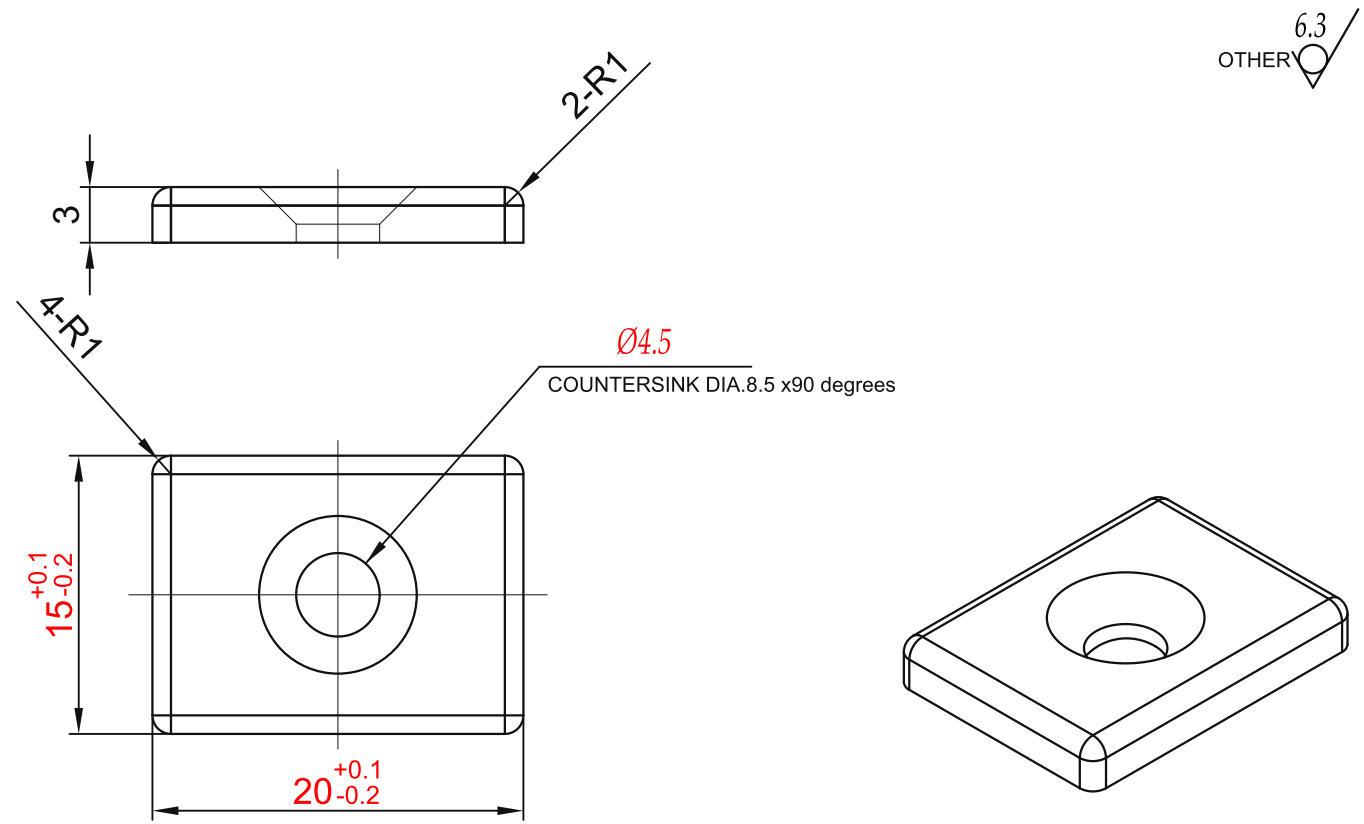

TECHNICAL NOTES:
1. Unspecified dimensional tolerances: GB/T1804-2000, class M.
2. Remove burrs and break sharp edges. No surface scratches, impact damage or spots.
3. Finish 01: sandblast and anodize; finish 03: black anodize.

sinsdar

ALUMINUM END CAPS

DRAWING / PART NUMBER

XARC01-1520 / XARC03-1520

MATERIAL: A6063-T5

UNIT: mm SCALE: see dimensions SHEET: 1 / 1