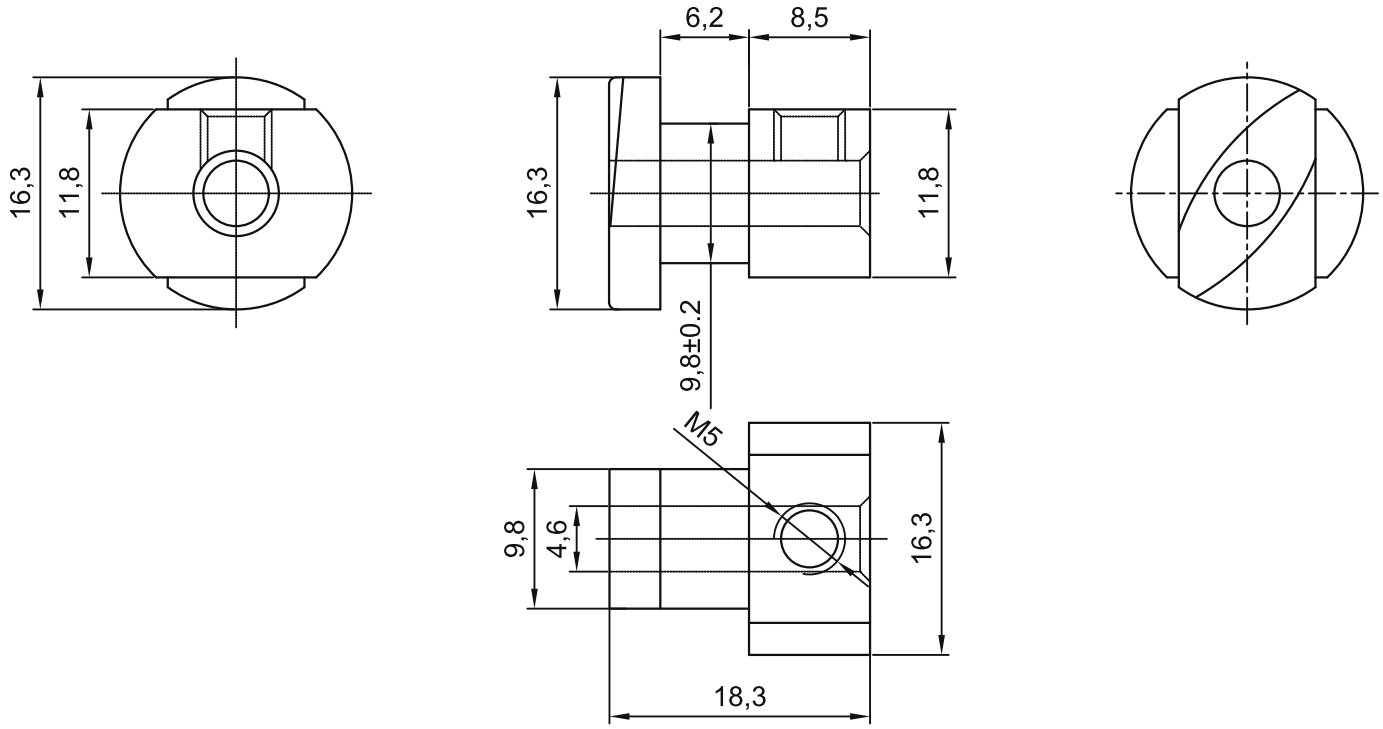

TECHNICAL NOTES:
1. Unspecified dimensional tolerances: +/-0.3 mm.
2. Unspecified fillets R0.5; round sharp edges R0.3;
threaded-hole chamfers C0.5.
3. Nickel-plate the surface; no obvious mould marks or burrs.
4. Threads must run freely; includes M5 x5 mm locking screw.

2019.09.11

sinsdar

WIRE MESH CONNECTORS

DRAWING / PART NUMBER

XAVK22-D4-10

MATERIAL: Zinc alloy

UNIT: mm SCALE: see dimensions SHEET: 1 / 1