OTHER 0.8

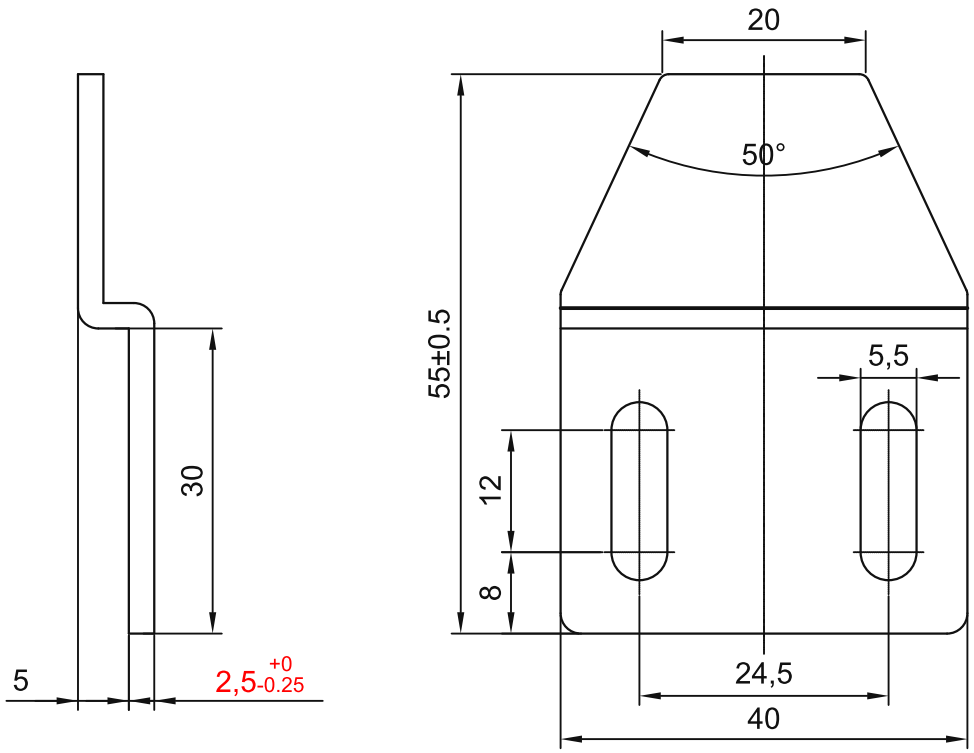

TECHNICAL NOTES:
1. Unspecified dimensional tolerances: +/-0.3 mm.
2. No surface scratches or impact damage; edges must not be sharp to touch.
3. Chrome-plate the surface.

sinsdar

STRIKER PLATES

DRAWING / PART NUMBER
XAKF23-T5

MATERIAL: Carbon steel

UNIT: mm SCALE: see dimensions SHEET: 1 / 1