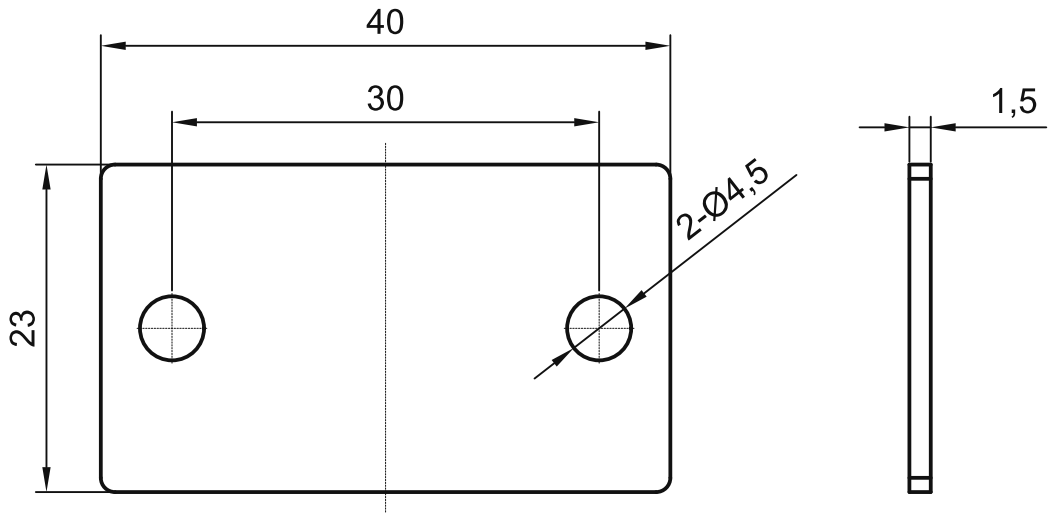

TECHNICAL NOTES:
1. Unspecified dimensional tolerances: IT12.
2. Break sharp edges; no burrs.
3. No scratches or impact damage on the surface.
4. Nickel-plate the surface.

sinsdar

DOOR STOPPERS

DRAWING / PART NUMBER

XAKC22-TIEPIAN

MATERIAL: Carbon steel

UNIT: mm SCALE: see dimensions SHEET: 1 / 1