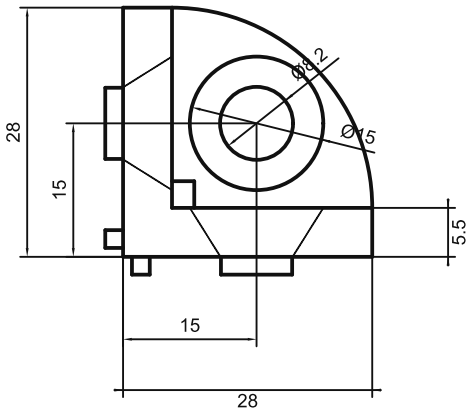

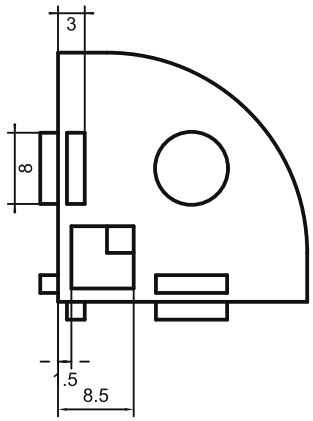

TECHNICAL NOTES:
1. Unit: mm.
2. Surface finish: Spray coating.
3. Verify the mating profile and fasteners.
4. Only nominal selection dimensions are stated; supplier tolerances are not adopted.

sinsdar

ROUNDED THREE-WAY CONNECTORS

DRAWING / PART NUMBER

XADW48-308

MATERIAL: Zinc alloy

UNIT: mm SCALE: see dimensions SHEET: 1 / 1