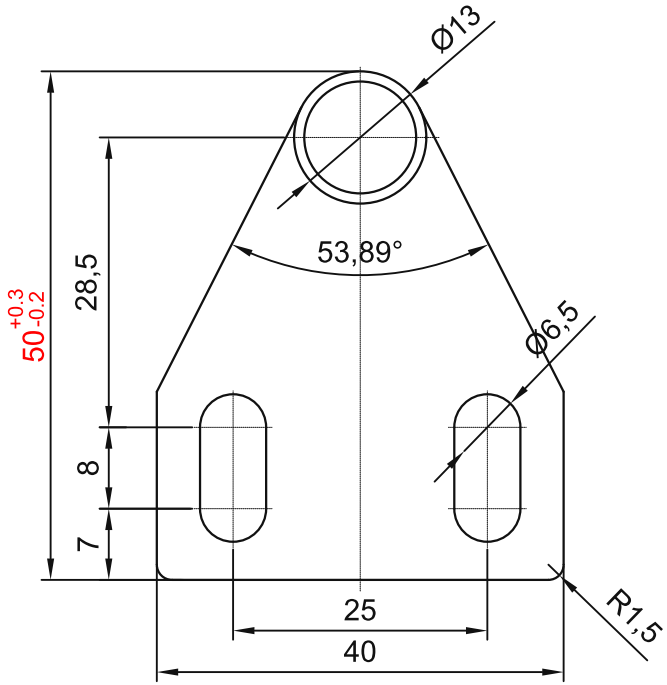

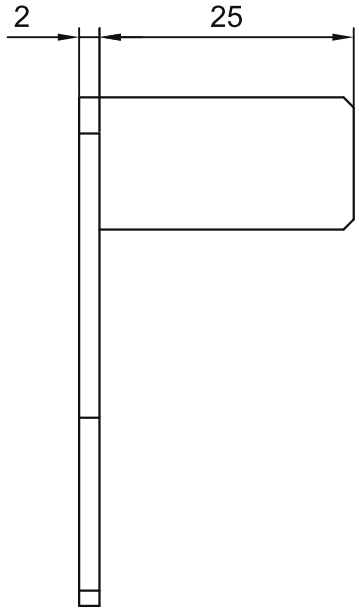

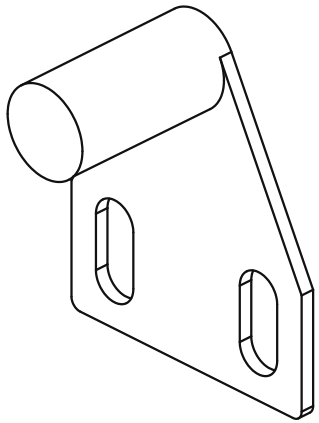

3.2

OTHER

TECHNICAL NOTES:
1. Unspecified dimensional tolerances: +/-0.3.
2. Round all sharp edges R0.5.

4. Nickel-plate the surface; no obvious mould marks or burrs.

sinsdar

DOOR STOPPERS

DRAWING / PART NUMBER

XAKC22-1540-F25

MATERIAL: S45C

UNIT: mm SCALE: see dimensions SHEET: 1 / 1