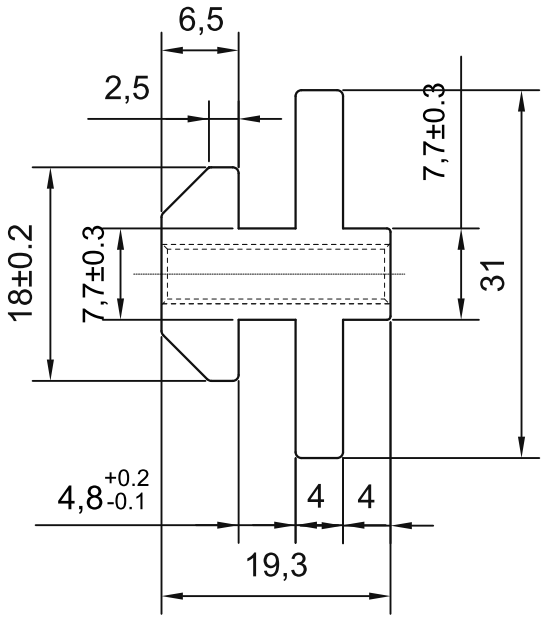

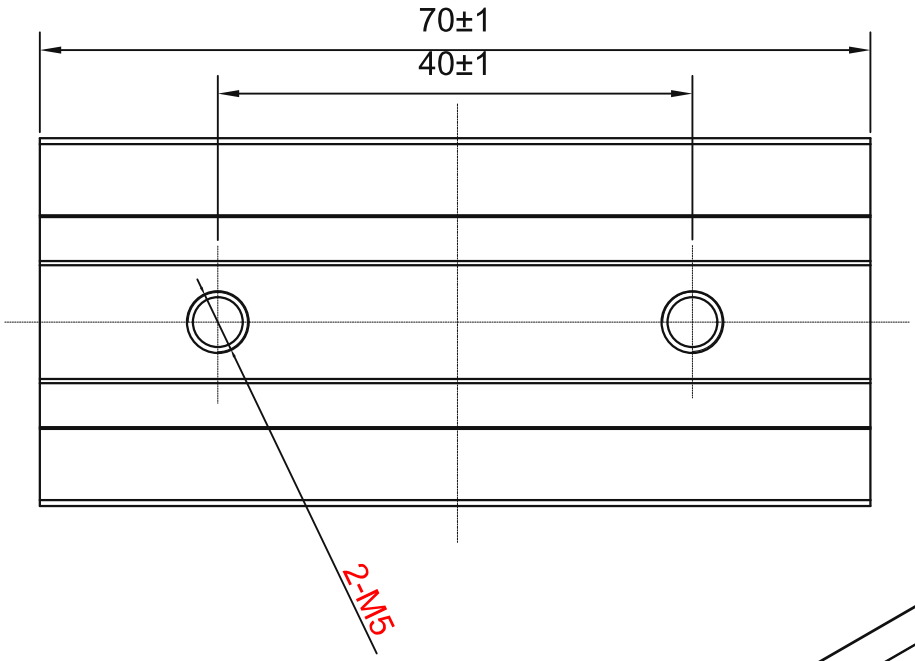

OTHER 6.3

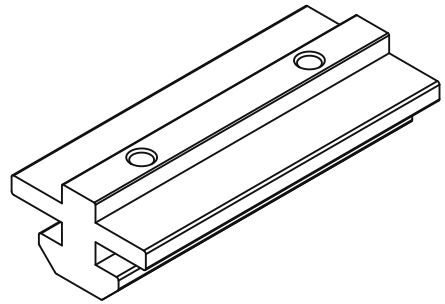

TECHNICAL NOTES:
1. Unspecified dimensional tolerances: GB/T1804-2000, class M.
2. Unspecified fillets R0.3-0.5; threaded-hole chamfers C0.5.
3. Break sharp edges; no burrs.
4. No surface scratches or impact damage.
5. Product mass: 19 g.

sinsdar

PROFILE SLIDE STRIPS

DRAWING / PART NUMBER
XAVF82-408-B

MATERIAL: HDPE

UNIT: mm SCALE: see dimensions SHEET: 1 / 1