COVER: PA

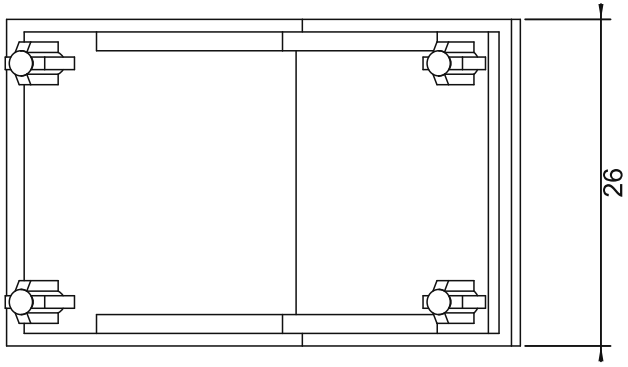

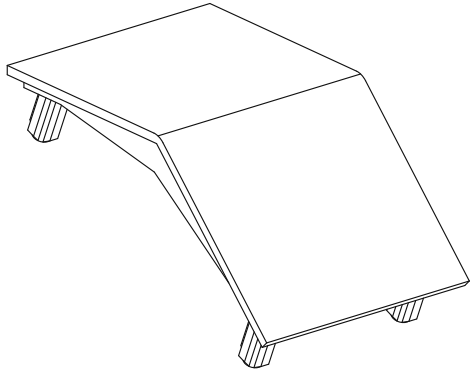

INTERIOR ANGLE: 135°

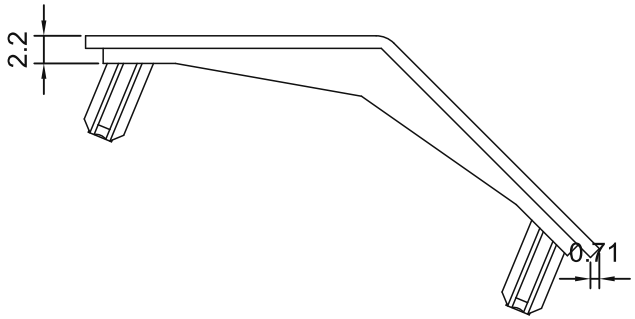

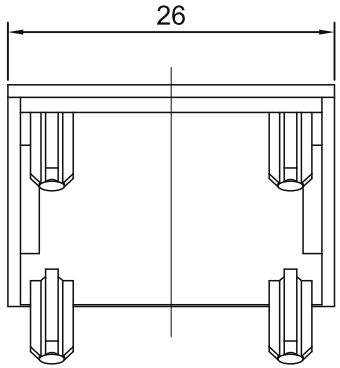

TECHNICAL NOTES:
1. No glossy areas, scratches, flow marks, parting lines or injection marks.
2. Match the cover to the connector body.
3. Colour: black.

sinsdar

135 DEGREE CONNECTOR - COVER

DRAWING / PART NUMBER
XADE11-G306

MATERIAL: PA (black)

UNIT: mm SCALE: see dimensions SHEET: 1 / 1