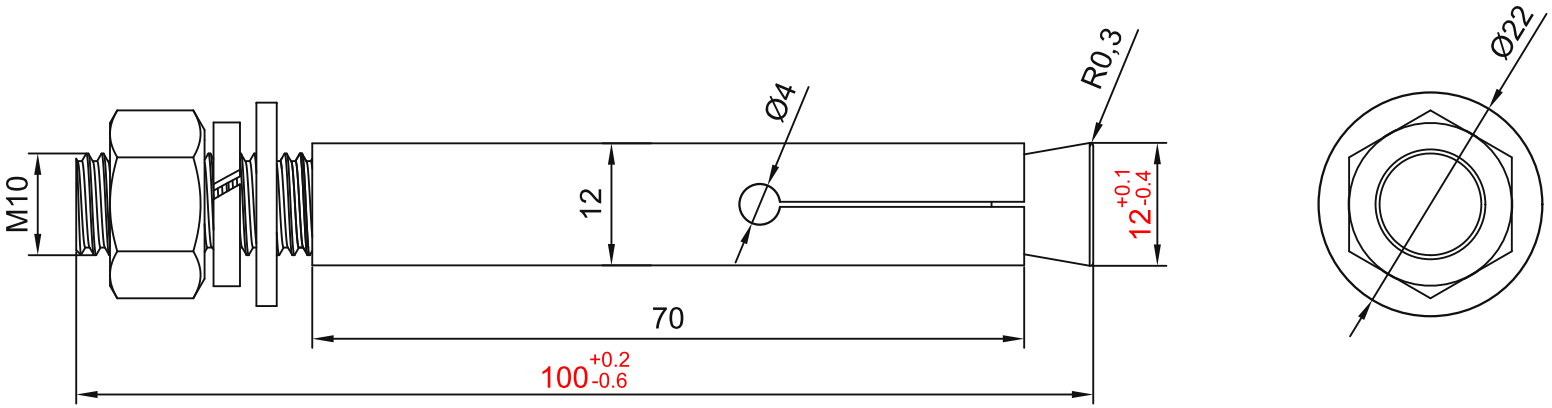

TECHNICAL NOTES:
1. Unspecified dimensional tolerances: IT10.
2. Unspecified fillets/chamfers: R/C0.5; threaded-hole chamfers: C0.5.
3. Zinc-plate the carbon-steel surface; no burrs.

sinsdar

EXPANSION ANCHOR BOLTS

DRAWING / PART NUMBER

XAVP21-N-10-100

MATERIAL: Carbon steel

UNIT: mm SCALE: see dimensions SHEET: 1 / 1