

ACCESSORY

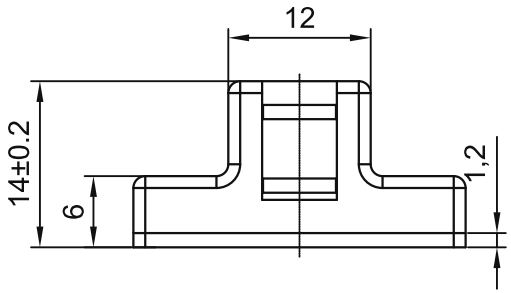

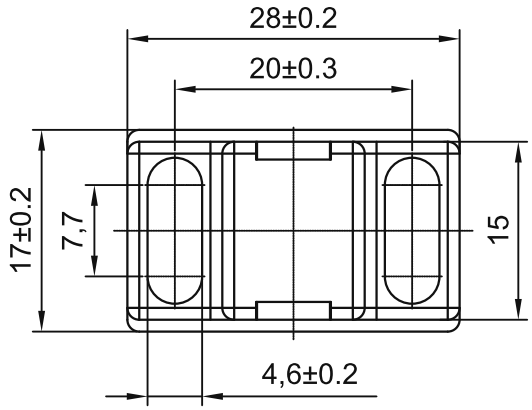

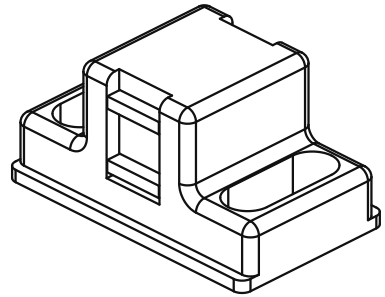

TECHNICAL NOTES:
1. Unspecified dimensional tolerances: IT12.
2. Secure magnetic retention required by source drawing.
3. No obvious surface scratches or damage.

sinsdar

PROFILE DOOR CATCHES

DRAWING / PART NUMBER
XAKB52-1728

MATERIAL: PA

UNIT: mm SCALE: see dimensions SHEET: 1 / 1