

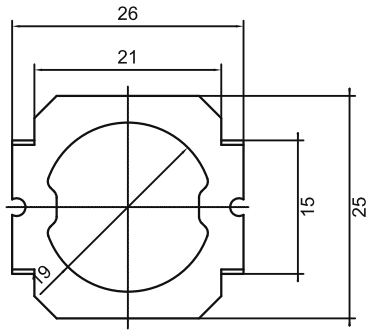

ACCESSORY

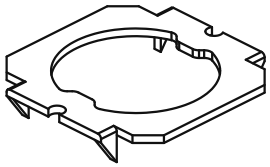

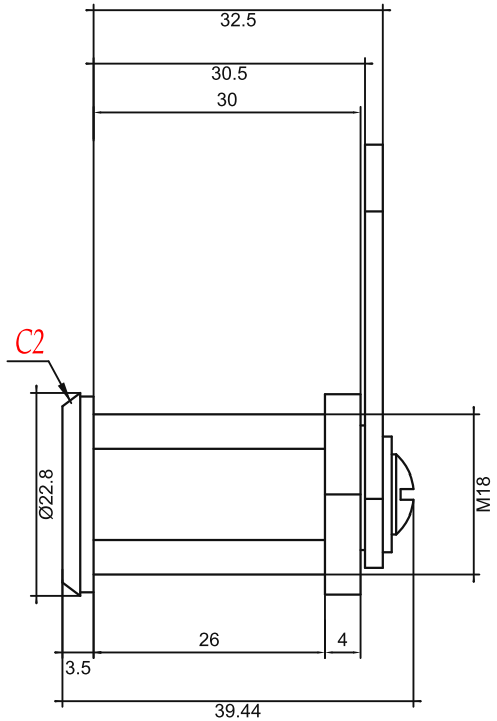

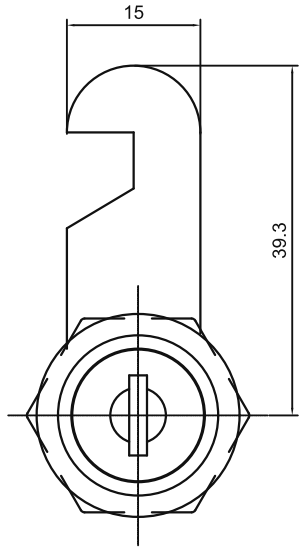

TECHNICAL NOTES:
1. Material: Carbon steel.
2. Surface finish: Chrome plated.
3. Verify mating panel and mounting clearances.
4. Manufacturing tolerances are not specified in the reviewed official catalogue.

sinsdar

PROFILE DOOR LOCKS

DRAWING / PART NUMBER

XAKN23-L30

MATERIAL: Carbon steel

UNIT: mm SCALE: see dimensions SHEET: 1 / 1