

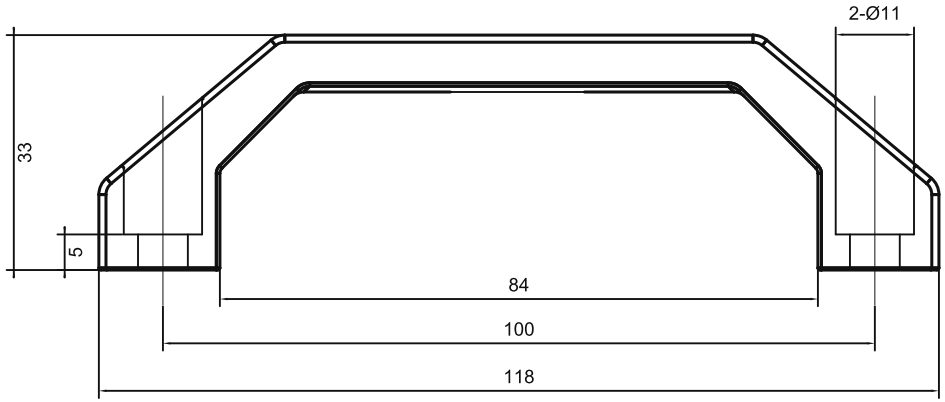

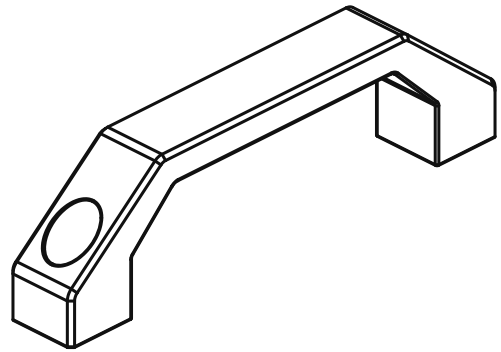

TECHNICAL NOTES:
1. Material: ADC12.
2. Surface finish: Silver-white spray coating.
3. Verify mating panel and mounting clearances.
4. Manufacturing tolerances are not specified in the reviewed official catalogue.

sinsdar

SQUARE BRIDGE PULL HANDLES

DRAWING / PART NUMBER

XAKL14-100

MATERIAL: ADC12

UNIT: mm SCALE: see dimensions SHEET: 1 / 1