

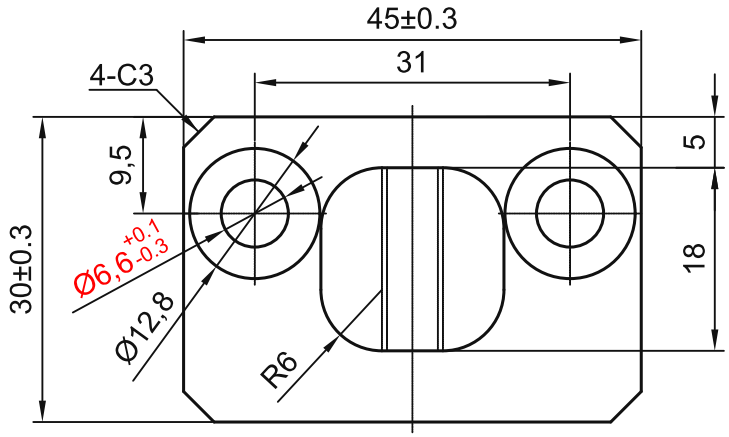

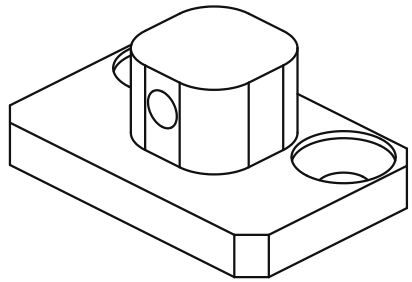

OTHER 3.2

TECHNICAL NOTES:
1. Unspecified dimensional tolerances: IT10.
2. Round sharp edges R0.5; threaded-hole chamfers C0.5.
3. Electrolytic surface finish; no obvious mould marks or burrs.
4. Threads must run freely.
5. Countersunk screw heads must not protrude above the countersink.

sinsdar

WIRE MESH CONNECTORS

DRAWING / PART NUMBER
XAVB23-3040-A

MATERIAL: SUS304

UNIT: mm SCALE: see dimensions SHEET: 1 / 1