OTHER

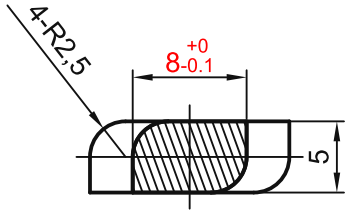

SECTION B-B

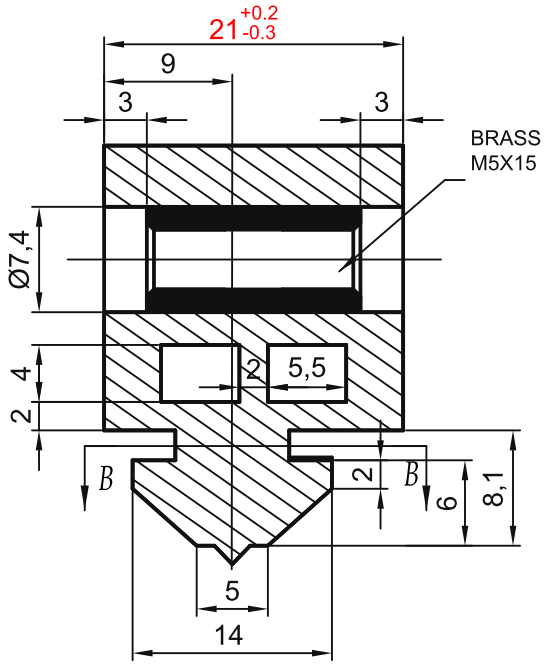

SECTION A-A

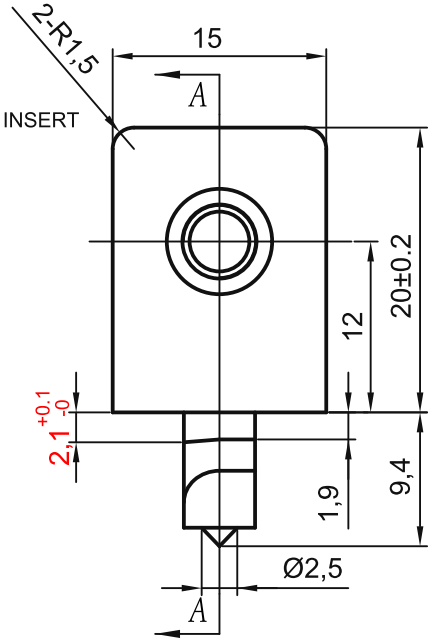

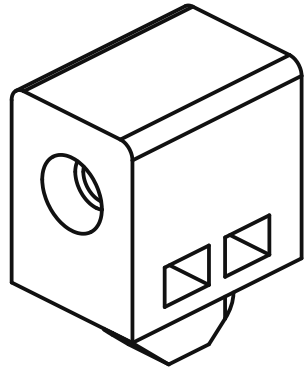

TECHNICAL NOTES:
1. Unspecified dimensional tolerances: +/-0.2 mm.
2. Round sharp edges R0.3.
3. No drag marks, sink marks, short shots, deformation or other defects on the exterior.
4. Place brass knurled inserts in the mould before moulding.

sinsdar

SPACER BLOCKS

DRAWING / PART NUMBER
XAMV53-308

MATERIAL: PA (polyamide)
UNIT: mm SCALE: see dimensions SHEET: 1 / 1