

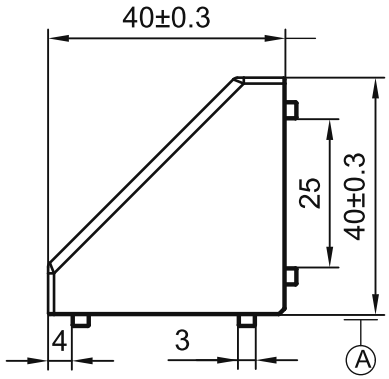

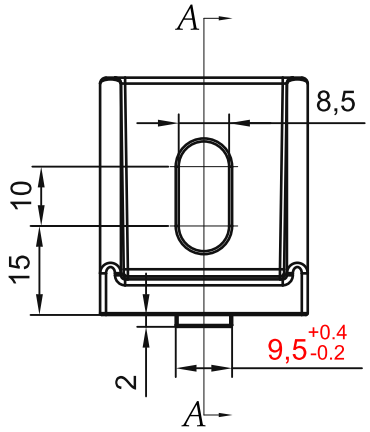

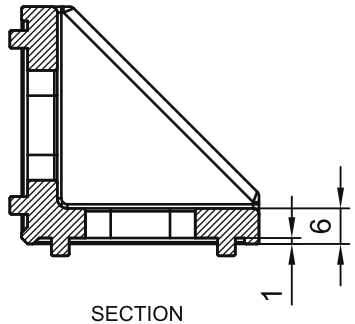

SECTION
A-A

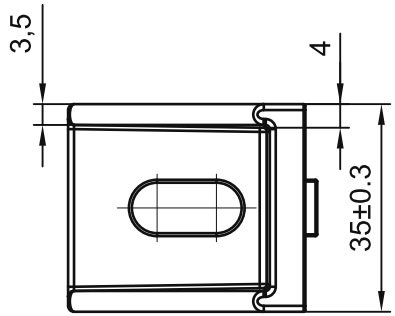

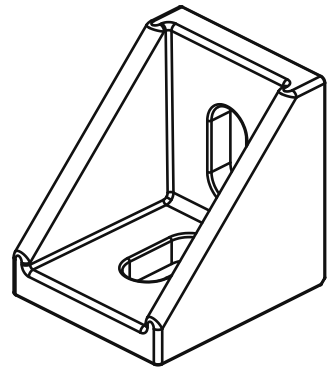

TECHNICAL NOTES:
1. Unspecified dimensions: see 3D drawing. Unspecified tolerances: +/-0.3 mm.
2. Remove burrs and break sharp edges.

4. Sandblast the product surface.

sinsdar

DIE-CAST CORNER BRACKETS

DRAWING / PART NUMBER
XABB11-4010-4040

MATERIAL: ADC12

UNIT: mm SCALE: see dimensions SHEET: 1 / 1