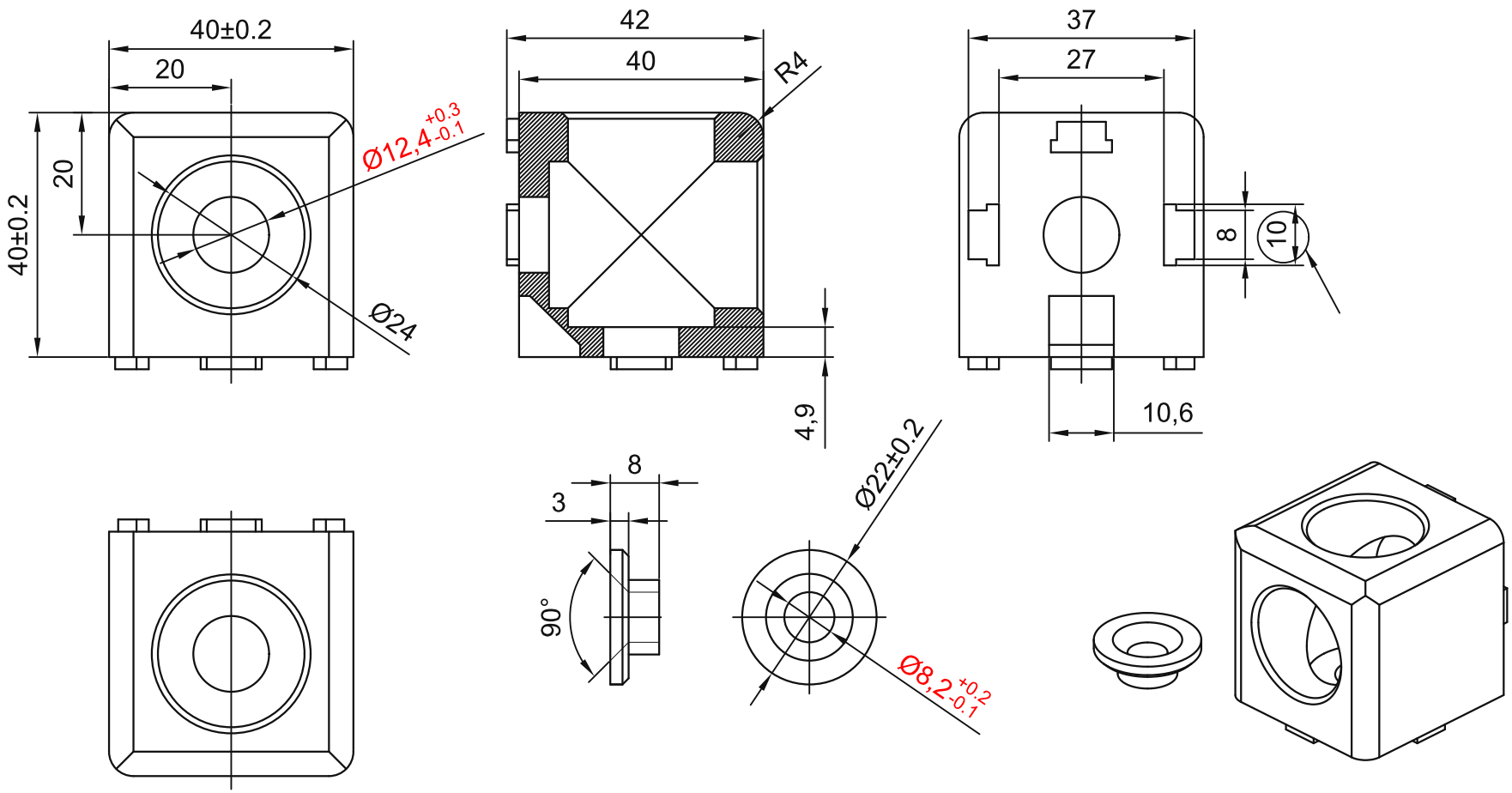

SOURCE SEMI-FINISHED PART; MILL LOCATING FEET
MILL FROM 10 mm TO 8 mm

TECHNICAL NOTES:
1. Unspecified dimensional tolerances: IT10.
2. Unspecified fillets/chamfers: R/C0.5.
3. Spray-paint the surface; no obvious mould marks or burrs.
4. Includes two accessories and two end caps.

sinsdar

CUBE CONNECTORS

DRAWING / PART NUMBER
XADW48-G408-D

MATERIAL: ADC12

UNIT: mm SCALE: see dimensions SHEET: 1 / 1