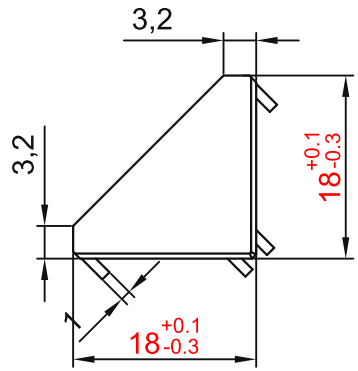

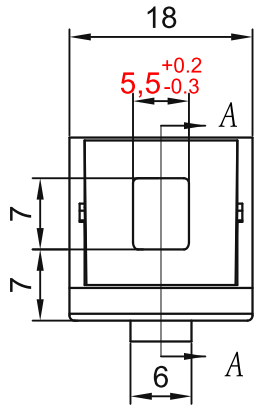

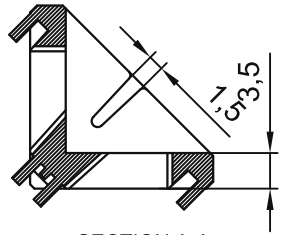

SECTION A-A

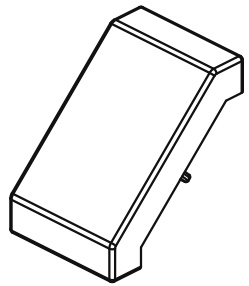

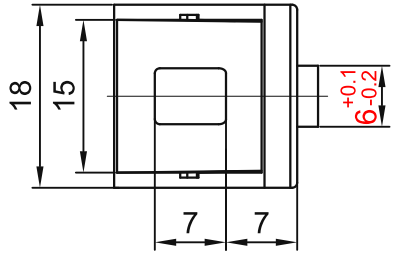

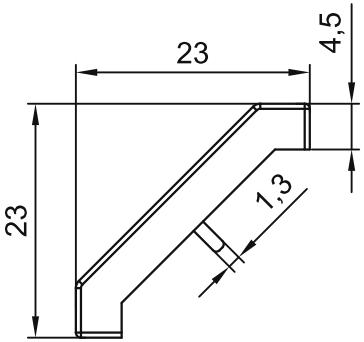

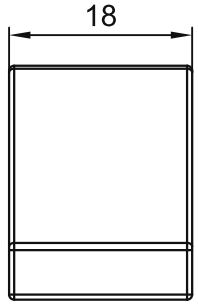

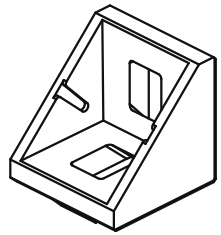

TECHNICAL NOTES:
1. Unspecified dimensional tolerances: +/-0.5 mm.
2. Unspecified fillets/chamfers: R/C0.5.
3. Grind the surface; no obvious mould marks or burrs.

sinsdar

DIE-CAST CORNER BRACKETS

DRAWING / PART NUMBER
XABB11-206-2020G

MATERIAL: ADC12

UNIT: mm SCALE: see dimensions SHEET: 1 / 1