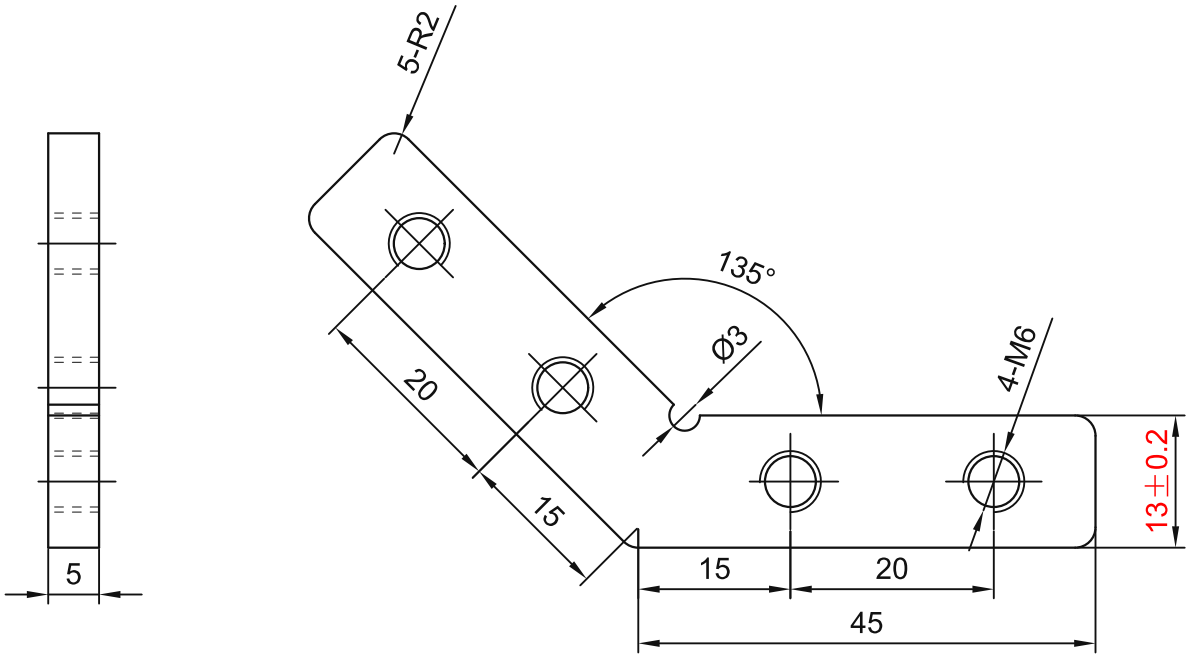

TECHNICAL NOTES:
1. Applicable tolerance standard: GB/T1804-2000, class M.
2. Remove burrs and break sharp edges. No surface scratches, impact damage or spots.
3. Brush one face. Threads must run freely.
4. Product mass: 41.4 g.

sinsdar

INTERIOR CORNER BRACKETS

DRAWING / PART NUMBER

XADN31-308-K13-135

MATERIAL: SUS304

UNIT: mm SCALE: see dimensions SHEET: 1 / 1