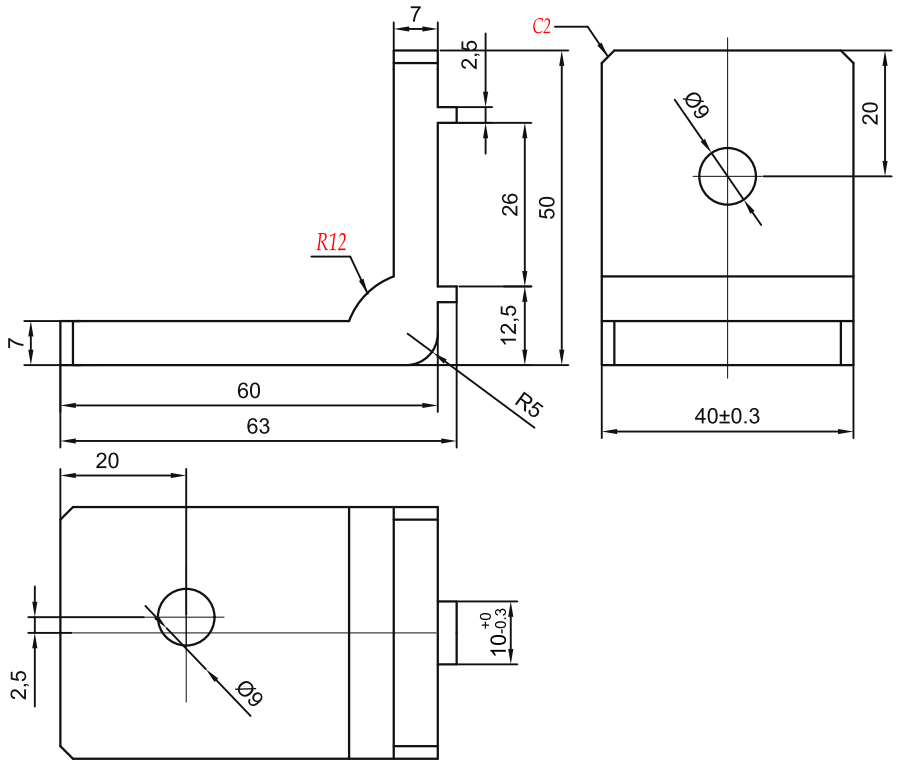

TECHNICAL NOTES:
1. Unspecified dimensional tolerances: +/-0.3 mm.
2. Remove burrs and break sharp edges. No scratches, impact damage or spots.
3. Sandblast and anodize the surface.

sinsdar

SAFETY FENCE BRACKETS

DRAWING / PART NUMBER
XAVB01-40R

MATERIAL: A6063-T5

UNIT: mm SCALE: see dimensions SHEET: 1 / 1