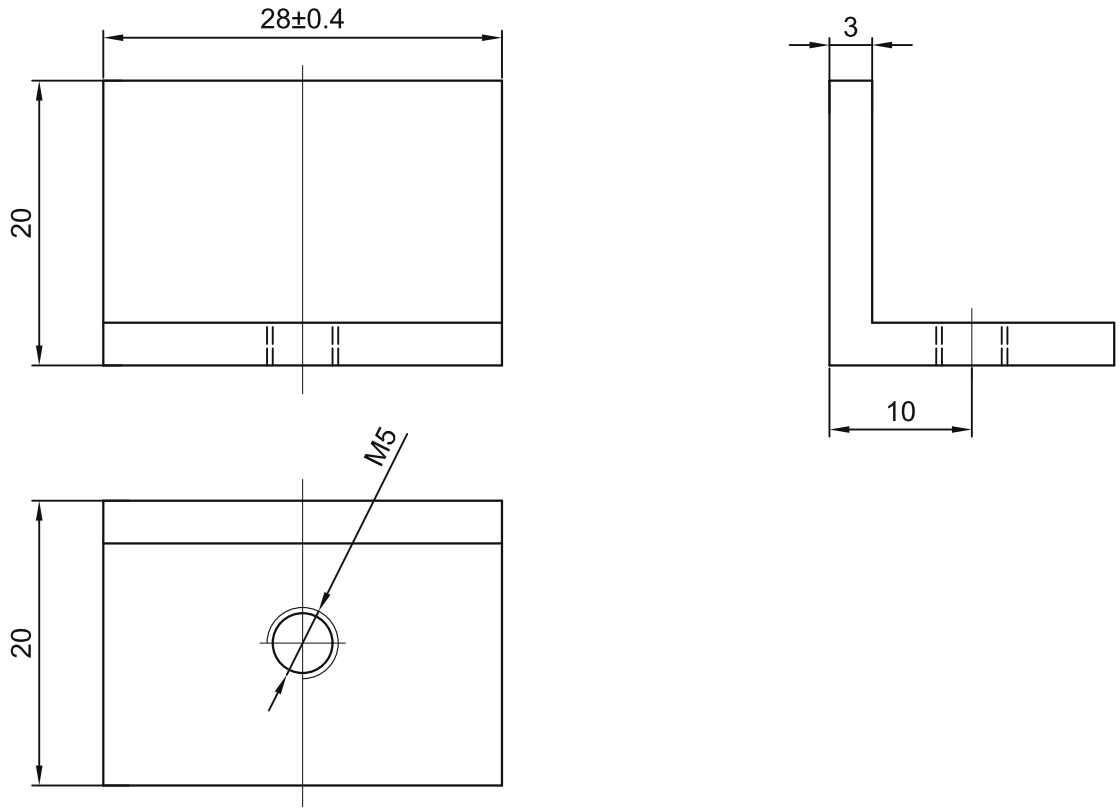

TECHNICAL NOTES:
1. Unspecified dimensional tolerances: +/-0.3 mm.
2. Deburr and break sharp edges; threads must run freely. No surface scratches, impact damage or spots.
3. Sandblast and anodize the surface.

sinsdar

SLIDING DOOR TRAVEL STOPS

DRAWING / PART NUMBER
XAVF01-D

MATERIAL: A6063-T5

UNIT: mm SCALE: see dimensions SHEET: 1 / 1