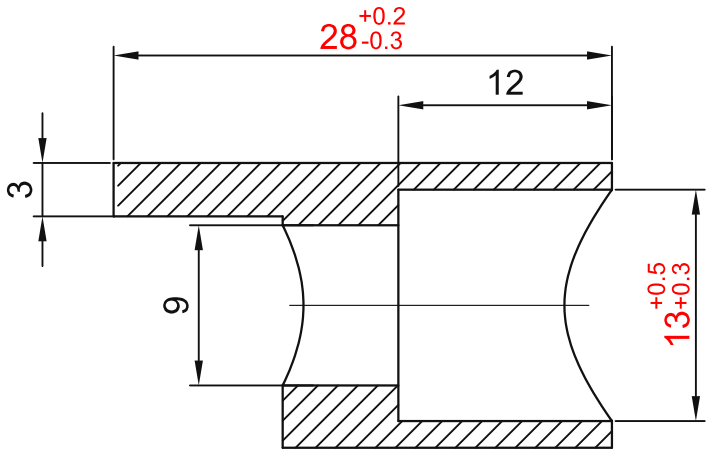



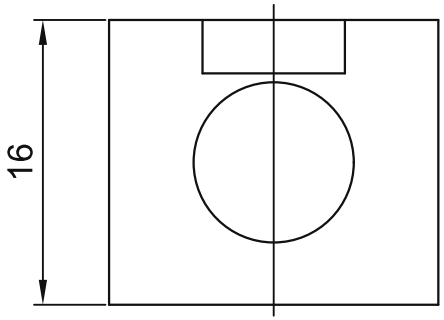

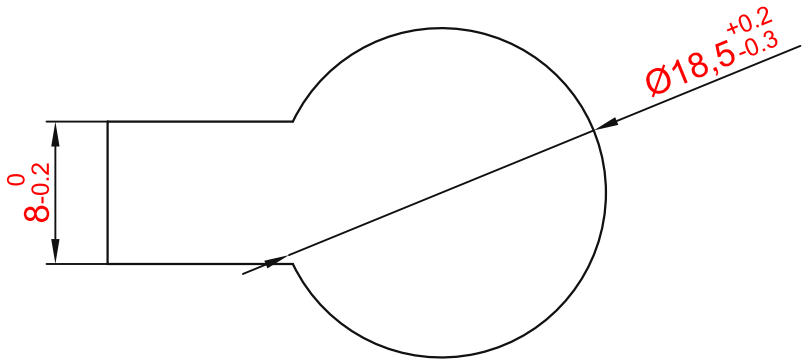

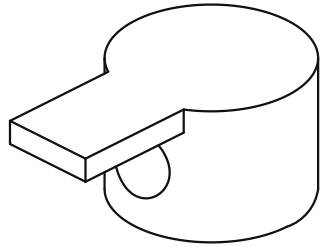

TECHNICAL NOTES:
1. Unspecified dimensional tolerances: IT10.
2. No burrs, shrinkage or obvious mould marks.
3. No surface impact damage or scratches.
4. Pearl nickel plate the surface (rack plating).
5. Product mass: unspecified in source.

sinsdar

ANCHOR FASTENER CAMS

DRAWING / PART NUMBER

XADJ42-G408-D9

MATERIAL: Zinc alloy (grade 3#)

UNIT: mm SCALE: see dimensions SHEET: 1 / 1